Solplanet

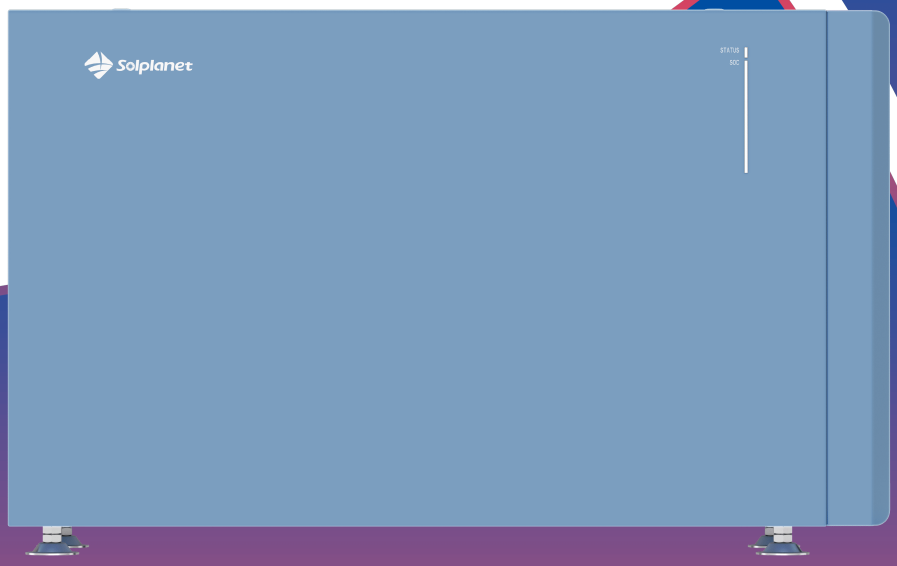

User Manual

APL15.0D-S

Android

iOS

Contents

1 General information ... 3
1.1 About this document ... 3
1.2 Product validity ... 3
1.3 Target group ... 3
1.4 Symbols ... 4
2 Safety ... 5
2.1 Intended use ... 5
2.2 Important safety instructions ... 5
2.3 Symbols on the label ... 7
2.4 Emergency Measures ... 8
3 Unpacking and storage ... 9
3.1 Scope of delivery ... 9
3.2 Product storage ... 10
4 Battery system overview ... 11
4.1 Product description ... 11
4.2 Dimensions ... 12
4.3 LED indicator ... 12
4.4 Interfaces and functions ... 17
4.5 Fire Supression Systems ... 17
5 Mounting ... 18
5.1 Requirements for mounting ... 18
5.2 Mounting with single battery application ... 21
5.3 Mounting with parallel batteries application ... 24
6 Electrical connection ... 25
6.1 Overview of the connection area ... 25
6.2 Connecting the grounding conductor ... 25
6.3 Connecting the power cable and network cable with single battery application ... 26
6.4 Connection the power cable and network cable with parallel batteries application ... 28
6.5 System wiring diagram ... 29
7 Commissioning and operating ... 33
7.1 Inspection before commissioning ... 33
7.2 Commissioning procedure ... 33
8 Decommissioning the product ... 35
9 Technical data ... 36
10 Troubleshooting ... 37
11 Maintenance ... 37
12 Recycling and disposal ... 38
13 Service and warranty ... 38
14 Contact ... 40

1 General information

1.1 About this document

This document describes the mounting, installation, commissioning, configuration, operation, troubleshooting and decommissioning of the AP-L series battery system (BS).

You will find the latest version of this document and further information on the BS in PDF format at www.solplanet.net.

It is recommended that this document be readily accessible at all times.

1.2 Product validity

This document is valid for the following models:

- APL15.0D-S

1.3 Target group

This document is intended for qualified persons who must perform the tasks exactly as described in this user manual.

All installation work must be performed by appropriately trained and qualified persons.

Qualified persons must possess the following skills:

- Knowledge of how batteries work and are operated.
- Knowledge of how an inverter works and is operated.
- Training in how to deal with the dangers and risks associated with installing, repairing and using electrical devices and batteries and installations.
- Training in the installation and commissioning of electrical devices.
- Knowledge of all applicable laws, standards and directives.
- Knowledge of and compliance with this document and all safety information.

Not adhering to the prescribed instructions may potentially void the manufacturer's warranty. If in doubt please contact the local Solplanet service team.

1.4 Symbols

DANGER

Indicates a hazardous situation which, if not avoided, will result in death or serious injury.

WARNING

Indicates a hazardous situation which, if not avoided, could result in death or serious injury.

CAUTION

Indicates a hazardous situation which, if not avoided, could result in minor or moderate injury.

NOTICE

Indicates a situation which, if not avoided, can result in property damage.

Information that is important for a specific topic or goal, however not related to safety.

2 Safety

2.1 Intended use

The product is a residential low-voltage Li-ion battery system with an integrated BMS, designed for solplanet solar hybrid inverters. It supports on-grid, off-grid, and backup modes with compatible solplanet inverters. Suitable for indoor and outdoor use within a temperature range of -20°C to 55°C.

- The product must only be operated with the inverters which are claimed by Solplanet. The inverters must be compatible with this product.
- The battery system must only be used as stationary equipment.
- Alterations to the product are not allowed unless the written permission of Solplanet is achieved. Unauthorized alterations will void the guarantee and warranty claims. Solplanet will not be held liable for any damage caused by such illegal changes.
- The product is not suitable for supplying life-sustaining medical devices. Please ensure that no personal injury would lead due to the power outage of the battery system.
- The product must only be used in countries for which it is approved or released by Solplanet and the grid operator.
- Use this product only in accordance with the information provided in this documentation and with the locally applicable standards and directives. Any other application may cause personal injury or property damage.
- The type label must remain permanently attached to the product.
- This document does not replace any regional, state, provincial, federal or national laws, regulations or standards that apply to the installation, electrical safety and use of the product.

2.2 Important safety instructions

The product has been designed and tested in accordance with international safety requirements. To prevent personal injury and property damage and to ensure long-term operation of the product, read this section carefully and observe all safety information at all times.

⚠ *DANGER*

Danger to life due to high voltages of the battery !

When the battery system connected to the inverter, and the circuit breaker is ON, the batteries will generate a high DC voltage which will be present in the DC cable and live components.

- Do not touch non-insulated parts or cables.
- Do not touch the DC conductors.
- Do not touch any live components of the product.
- Do not open the product.
- All work on the product must only be carried out by qualified personnel who have read and fully understood all safety information contained in this document.
- Disconnect the product from voltage sources and ensure it cannot be reconnected before working on the product.
- Wear suitable personal protective equipment, in accordance with local regulations, when working on the product.

⚠ DANGER

Danger to life due to high temperature of the battery! !

Thermal runaway of batteries can cause fires.

- Do not hit, pull, drag, squeeze or step on the equipment or put the battery into fire. Otherwise, the battery may explode.
- Do not place the battery in a high temperature environment. Make sure that there is no direct sunlight and No heat source is allowed within 0.5 meters near the battery. When the ambient temperature exceeds 60°C, it will cause fire.
- Do not use the battery or the power control unit if it is defective, broken, or damaged. Damaged battery may leak electrolyte.
- Contact after-sale service immediately if the battery is not able to be started. Otherwise, the battery might be damaged permanently.

⚠ WARNING

Danger to life due to electric shock from destruction of measurement devices due to overvoltage !

Overvoltage can damage a measurement device and result in voltage being present in the enclosure of the measurement device.

Touching the live enclosure of the measuring device results in death or lethal injuries due to electric shock.

- Only use measuring devices with a higher voltage range than the system battery voltage.

⚠ WARNING

Risk of injury due to weight of product !

Injuries may result if the product is lifted incorrectly or dropped while being transported or mounted.

- Lift and transport the product carefully.
- Wear suitable personal protective equipment, in accordance with local regulations, when working on the product.

NOTICE

Damage to the battery system due to electrostatic discharge!

Internal components of the battery system can be irreparably damaged by electrostatic discharge.

- Ground yourself before touching any component.

NOTICE

Damage to the BS due to particles and water!

Particles such as dust and sand can damage the BS and impair its functionality.

- Only open the BS cover when the humidity is within the permitted range of the product and the environment is free of dust and sand.

2.3 Symbols on the label

	Beware of a danger zone! This symbol indicates that the product must be additionally grounded if additional grounding or equipotential bonding is required at the installation site.
	Beware of high voltage and operating current! The inverter operates at high voltage and current. Work on the inverter must only be carried out by skilled and authorized electricians.
	Beware of explosion! The battery is an electro chemical, and there is an explosion risk in extreme cases. Please keep away of it when the danger occurs.
	Beware of danger to children! The battery must be inaccessible to children.
	Beware Flammable Keep the battery system away from open flames or ignition sources of danger with flam!
	WEEE designation Do not dispose of the product together with the household waste but in accordance with the disposal regulations for electronic waste applicable at the installation site.
	CE marking The product complies with the requirements of the applicable EU directives.
	RCM Mark The product complies with the requirements of the applicable Australian standards.
	The battery is recyclable The battery can be recycled by a professional recycling organization, please refer to the relevant local regulations.
	Observe the documentation Read and understand all documentation supplied with the product.

2.4 Emergency Measures

Battery Electrolyte Leakage

If the battery module leaks electrolyte, avoid contact with the leaking liquid or gas. The electrolyte is corrosive. It will cause skin irritation or chemical burn to the operator. Anyone contact the leaked substance accidentally has to do as following:

- Breath in the leaked substance: Evacuate from the pollutedarea, and seek immediate medical assistance.
- Eye contact: Rinse your eyes for at least 15 minutes with clean w.ater and seek immediate medical assistance.
- Skin contact: Thoroughly wash the touch area with soap and clean water, and seek immediate medical assistance.
- Ingestion: Induce vomiting, and seek immediate medical asssistance.

Fire

- The battery may explode when the ambient temperature exceeds 150°C. Poisonous and hazard gas may be released if the battery is on fire.
- In the event of a fire,please make sure that the carbon dioxide extinguisher or Novac1230 or FM-200 is nearby.
- The fire cannot be put out by water or ABC dry powder extinguisher. Firefighters are required to wear full protective clothing and self-contained breathing apparatus.

3 Unpacking and storage

3.1 Scope of delivery

Check the scope of delivery for completeness and any visible external damage. Contact your distributor if the scope of delivery is incomplete or damage.

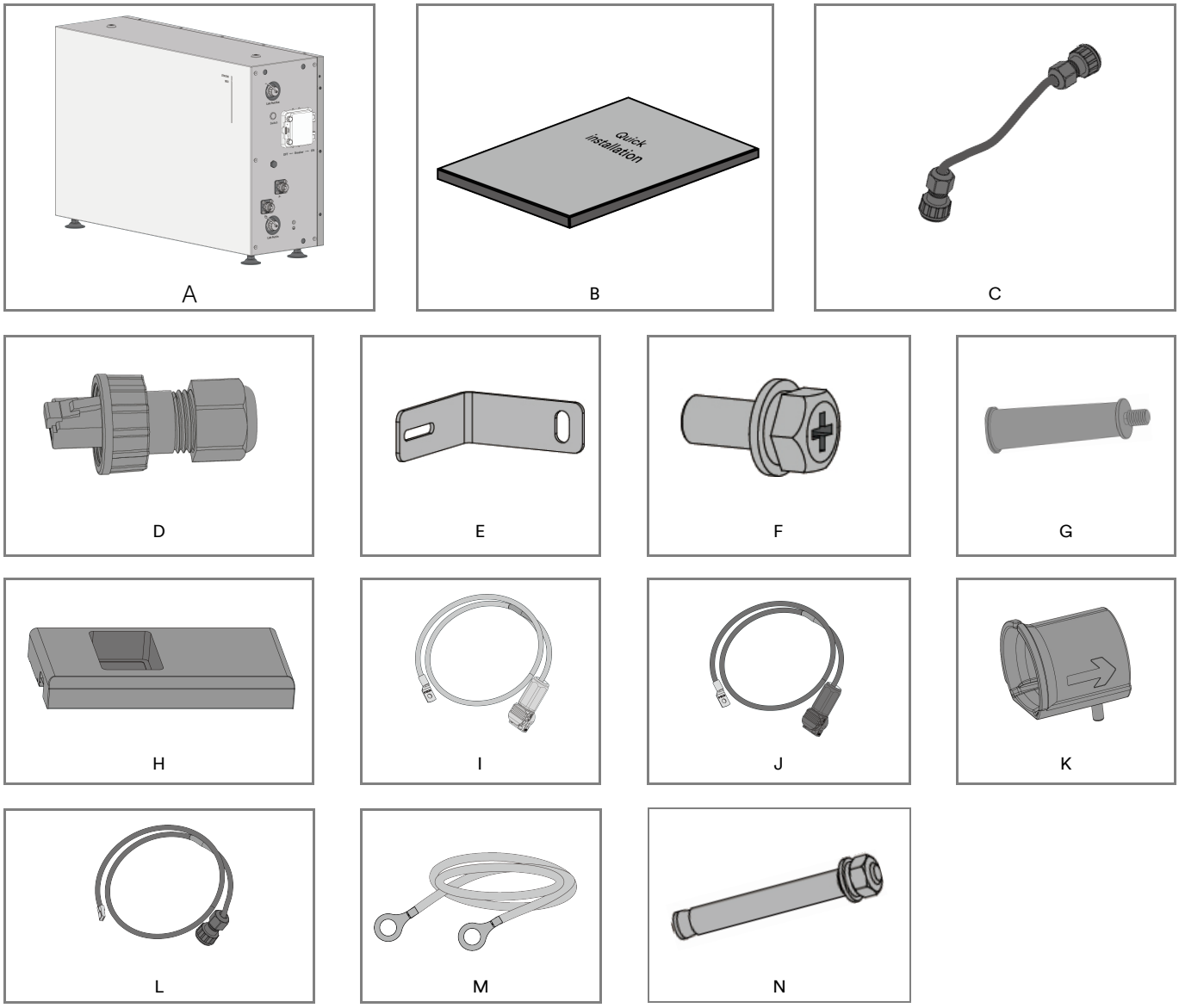

Object	Description	Quantity
A	Battery Module	1
B	Quick installation guide	1
C	Parallel Communication Cable	1
D	Terminating resistor	1
E	L-bracket	2
F	Hexagon screw（M5x14）	3
G	Handle	4
H	Decorative cover	1
I	Positive battery Cable (2m)	1
J	Negative battery Cable (2m)	1
K	Finger-Worn Unlocking Tool	1

L	BMS communication cable (3m)	1
M	PE Cable (2m)	1
N	Expansion Bolt (M8*80)	2

3.2 Product storage

Suitable storage is required if the equipment is not installed immediately:

- Store the battery in the original packing case.
- The storage temperature must be between -20°C to +60°C, and the storage relative humidity must be between 5% and 95%, non-condensing.
- The storage SOC: 25%~50%. Re-charge the battery every 6 months, to ensure no over-discharge of the battery occurs.
- The packing with the equipment shall not be tilted or inverted.
- Place the equipment in a cool place away from direct sunlight.
- Keep the equipment away from flammable, explosive, and corrosive materials.
- Keep the equipment away from rain.
- The product must be fully inspected and tested by authorised personnel before it can be put into operation, if it has been stored for three or more months.

4 Battery system overview

4.1 Product description

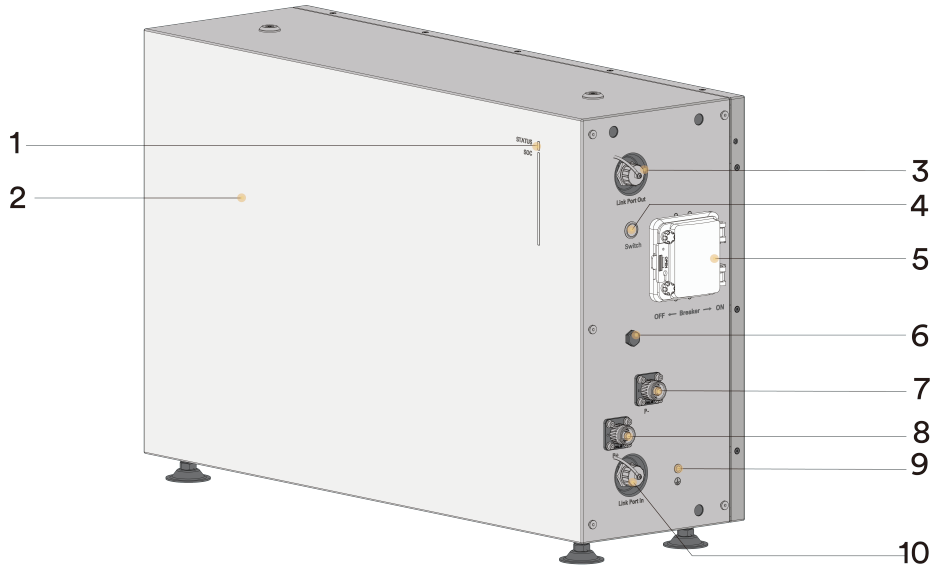

Figure shown here is for reference only. The actual product received may differ!

Object	Description
1	LED indicator
2	Battery Module
3	Link port out
4	Button Switch
5	Circuit breaker
6	Vent valve
7	P-
8	P+
9	Grounding terminal
10	Link port in

4.2 Dimensions

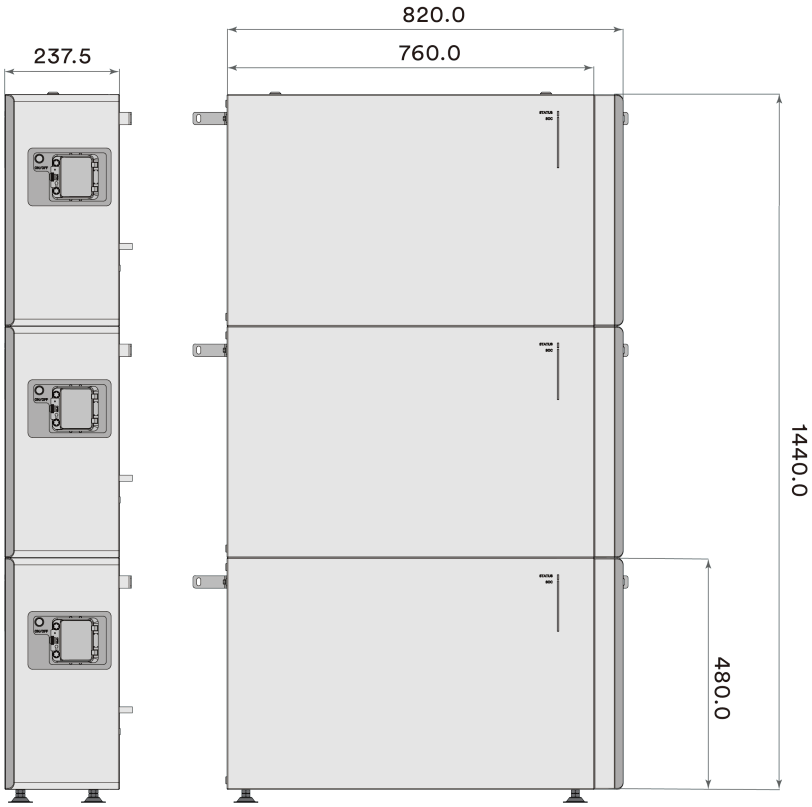

Unit: mm

4.3 LED indicator

The LEDs on the battery system indicate the status of the battery system(BS).

LED status definitions:

- Solid On: LED is permanently illuminated.
- Off: LED is off (is not illuminated).
- Breathing: The LED is cyclic light on from dark to bright.
- Blinking: The LED is 1s on and 1s off cyclic.

Function	LED		Description
Status		Solid ON	Indicates normal state.
		Breathing	Indicates sleep state.
		Blinking	Indicates communication loss.
		Solid ON	Indicates an alarm.
		Solid ON	Indicates a fault.
		Off	Indicates shutdown state.
SOC		ON	SOC:90%~100%
		ON	
		ON	
		ON	
		ON	
		ON	
		ON	
		ON	
		ON	
		ON	
SOC		OFF	SOC:80%~90%
		ON	
		ON	
		ON	
		ON	
		ON	
		ON	
		ON	
		ON	
		ON	

SOC		OFF	SOC:70%~80%
		OFF	
		ON	
		ON	
		ON	
		ON	
		ON	
		ON	
		ON	
		ON	
SOC		OFF	SOC:60%~70%
		OFF	
		OFF	
		ON	
		ON	
		ON	
		ON	
		ON	
		ON	
		ON	
SOC		OFF	SOC:50%~60%
		OFF	
		OFF	
		OFF	
		ON	
		ON	
		ON	
		ON	
		ON	
		ON	

SOC		OFF OFF OFF OFF OFF ON ON ON ON ON	SOC:40%~50%
SOC		OFF OFF OFF OFF OFF OFF ON ON ON ON	SOC:30%~40%
SOC		OFF OFF OFF OFF OFF OFF OFF ON ON ON	SOC:20%~30%

SOC		OFF	SOC:10%~20%
		OFF	
		OFF	
		OFF	
		OFF	
		OFF	
		OFF	
		OFF	
		ON	
		ON	
SOC		OFF	SOC:0%~10%
		OFF	
		OFF	
		OFF	
		OFF	
		OFF	
		OFF	
		OFF	
		OFF	
		ON	
SOC		ON	Firmware update state
		ON	
		ON	
		ON	
		ON	
		ON	
		ON	
		ON	
		ON	
		ON	

There are ten LEDs to indicate the State of Charge (SOC) of the battery and the different status of the LEDs indicates the different working state of the battery.

- Discharging state: Solid on (all bright LEDs according to SOC).
- Charging state: the current SOC LED (N-1) is solid on, and the other SOC LED (1-N) light up every 0.5S from bottom to top sequentially and cycling.
- Idle state: the SOC indicator LED is solid on. When the SOC is lower than 4%, the SOC indicator LED turns orange.
- Sleep state: all the SOC and status indicator LEDs breathe synchronously.
- Firmware update state: the SOC indicator LED is solid on with blue color.

4.4 Interfaces and functions

The product is equipped with the following interfaces and functions:

Communication (CAN) Interface - "Link Port"

The "Link Port" is an RJ45 port used for connecting the BS to an inverter. The product can communicate with the inverter through the CAN interfaces. The CAN interfaces can also be used for the parallal operation of the products.

System startup

Turn on the circuit breaker. press the button for 1s, all lights will turn on from bottom to top, BS is in working mode, and the device can be charged and discharged normally.

System sleep

Press the button for at least 5s. Make sure that both the SOC indicator and the status indicator of the BS are off.

System shut down

Turn off the circuit breaker. Make sure that both the SOC indicator and the status indicator of the BS are off.

4.5 Fire Supression Systems

The APL Series battery includes a built-in intelligent aerosol extinguishing device in each battery pack, designed to address emergency safety risks effectively.

Based on the battery module size and cell capacity, the integrated aerosol system extinguishes initial cell fires efficiently, preventing the spread of flames within the module. This inside-out approach provides the most effective fire suppresion, and minimizes thermal runaway losses.

The aerosol extinguishing device, QRR0.04G/S, contains a 100 g aerosol charge. When the termal wire detects a module temperature ⩾ 185 °C, it activates the aerosol generator in the fire extinguishing device, spraying the agent within ⩽ 3 seconds. This rapid response extinguishes fire and prevents recurrence, ensuring robust fire safety.

5 Mounting

5.1 Requirements for mounting

5.1.1 Requirements for Installation Location

DANGER

Danger to life due to fire or explosion !

Despite careful construction, electrical devices can cause fires. This can result in death or serious injury.

- Do not mount the product in areas containing highly flammable materials or gases.
- Do not mount the inverter in areas where there is a risk of explosion.

- A solid support surface must be available (e.g. concrete or masonry).
- The mounting location must be inaccessible to children.
- The installation location must be suitable for the weight and dimensions of the BS.
- Keep away from conductive (metal) dust.
- Keep away from water sources, heat sources and inflammable and explosive articles.
- The installation location must not be close to fire.
- The product should be mounted such that the LED indicators can be read without difficulty.
- The circuit breaker of the BS must always be freely accessible.
- The altitude of the installation location should be less than 4000 m.
- The operating temperature should be between -20°C ~ +55°C.
- The ambient humidity should be between 5-95%.
- The mounting location must not be exposed to direct solar irradiation. If the product is exposed to direct solar irradiation, the exterior components may age prematurely and overheating might occur. When becoming too hot, the BS reduces its power output to avoid overheating, and will reduce its lifetime also.

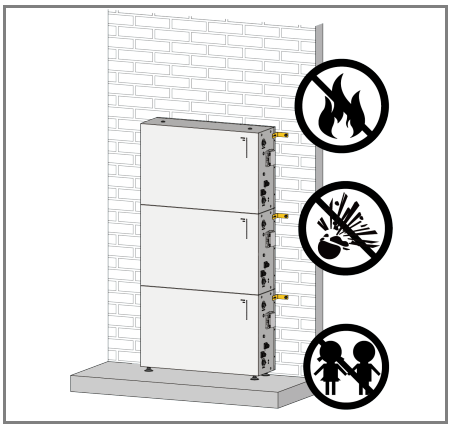

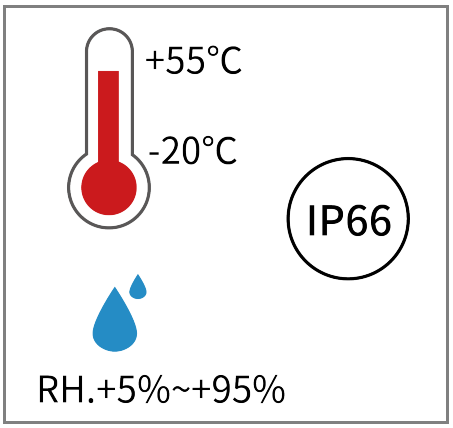

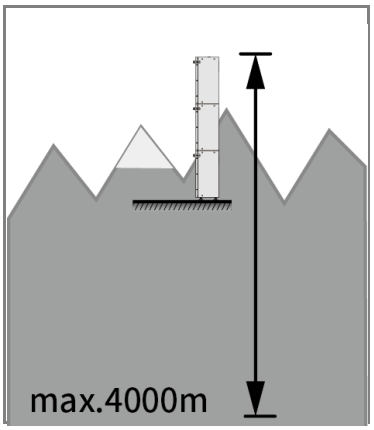

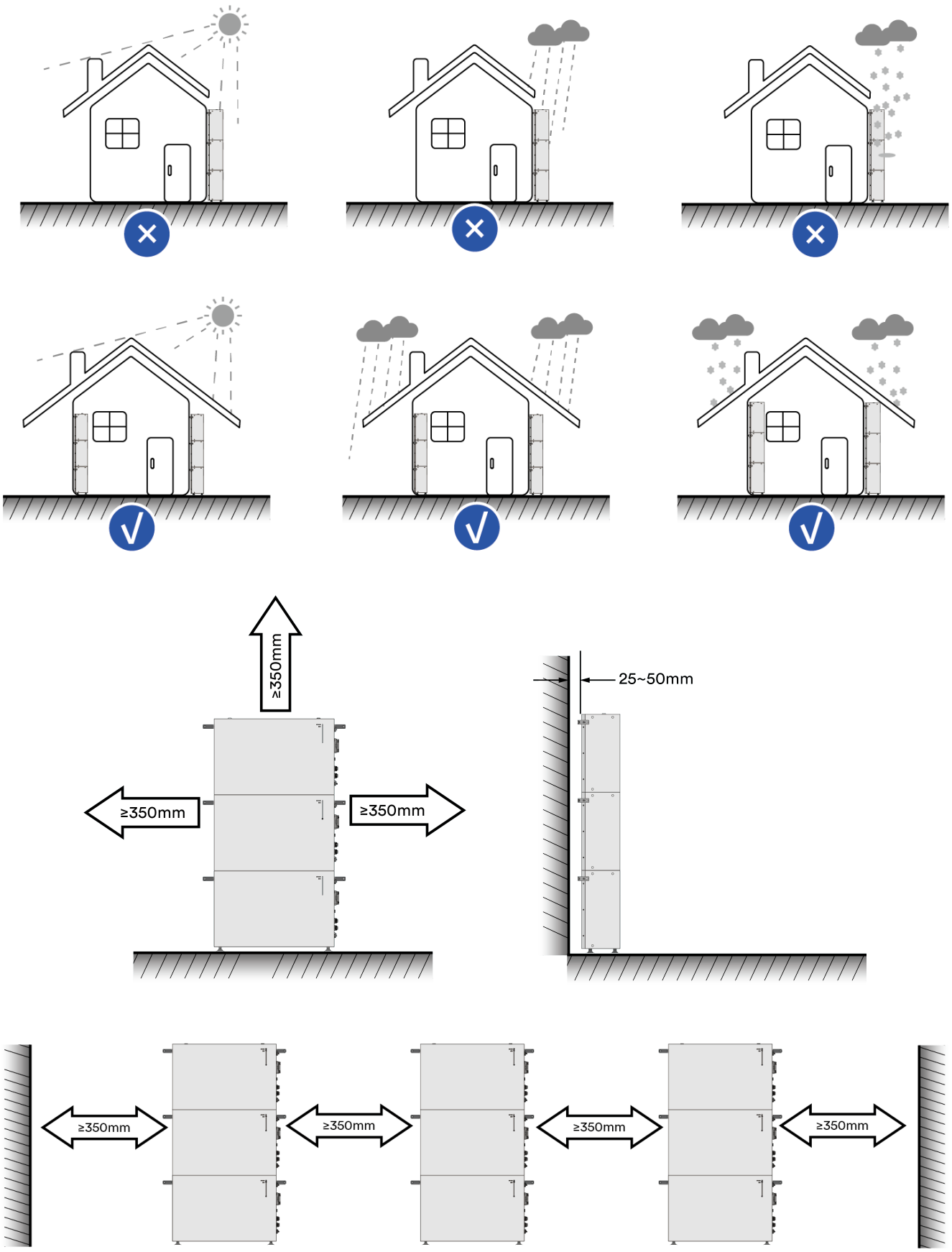
≥350mm
≥350mm
≥350mm
25~50mm
≥350mm
≥350mm
≥350mm
≥350mm

5.1.2 Tools

Phillips-screwdriver
Specification: M5/M6

Marker pen

Phillips Screwdriver Bit
Specification: M5 / M6

Wrench

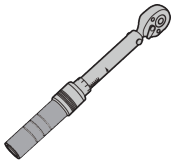

Torque wrench

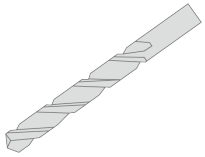

Twist drill(8mm)

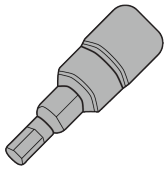

Hexagon socket bit S=4

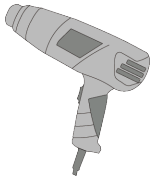

Heat Gun

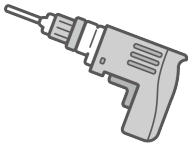

Electric Drill

Network Cable Crimping Tool

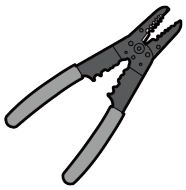

Wire Stripper

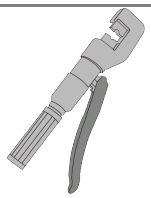

Crimping Pliers

Scissor

Hammer

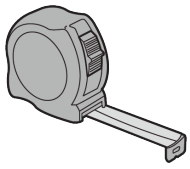

Tape measure

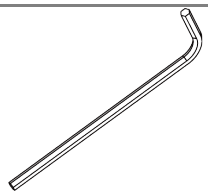

Hex Key S=4

5.1.3 Safety gear

Wear the following safety gear when working on the BS. Adhere to local occupational health and safety standards.

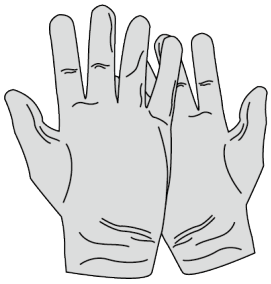

Insulated gloves

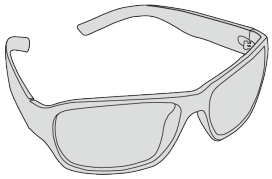

Safety goggles

Safety shoes

5.2 Mounting with single battery application

DANGER

Danger to life due to high voltages of the battery!

When the battery system connected to the inverter, and the circuit breaker is ON, the batteries will generate a high DC voltage which will be present in the DC cable and live components.

- Do not touch non-insulated parts or cables.
- Do not touch the DC conductors.
- Do not touch any live components of the product.
- Do not open the product.
- All work on the product must only be carried out by qualified personnel who have read and fully understood all safety information contained in this document.
- Disconnect the product from voltage sources and ensure it cannot be reconnected before working on the product.
- Wear suitable personal protective equipment, in accordance with local regulations, when working on the product.

WARNING

Risk of injury due to weight of product!

Injuries may result if the product is lifted incorrectly or dropped while being transported or mounted.

- Lift and transport the product carefully.
- Wear suitable personal protective equipment, in accordance with local regulations, when working on the product.

Step 1: Open the outer packaging of the cardboard box.

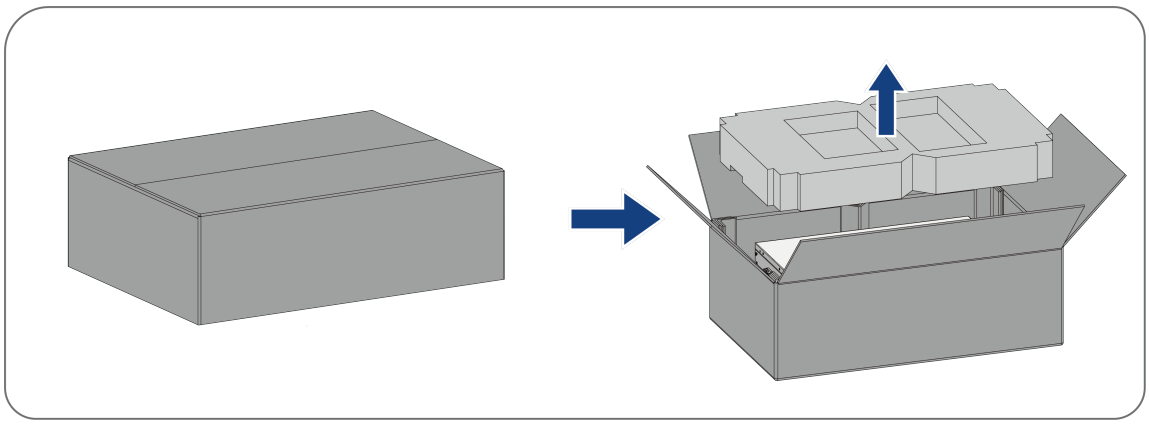

Step 2: After installing the four handles in sequence, remove the battery, lift it to the destination, and then remove the handles.

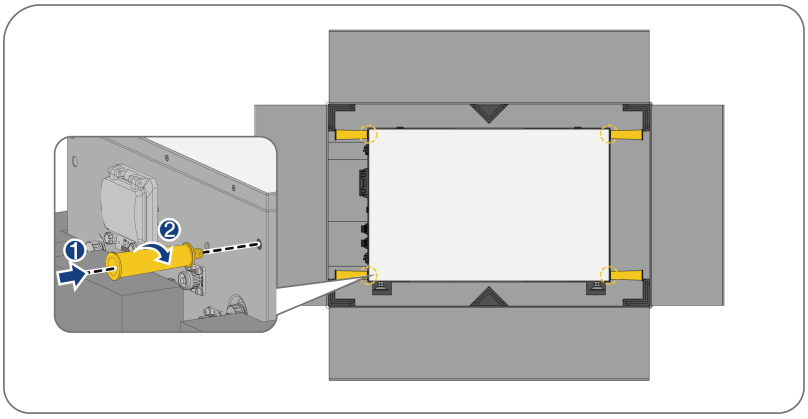

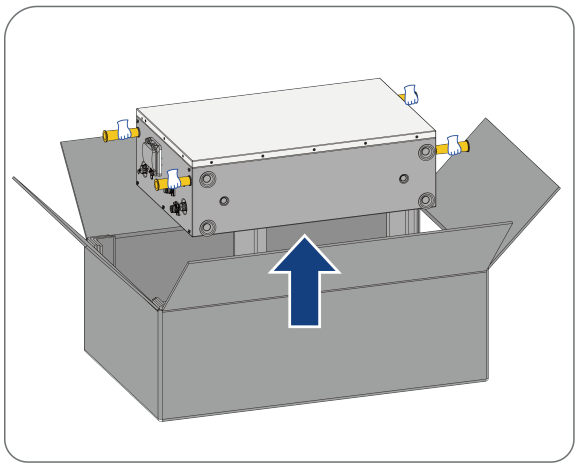

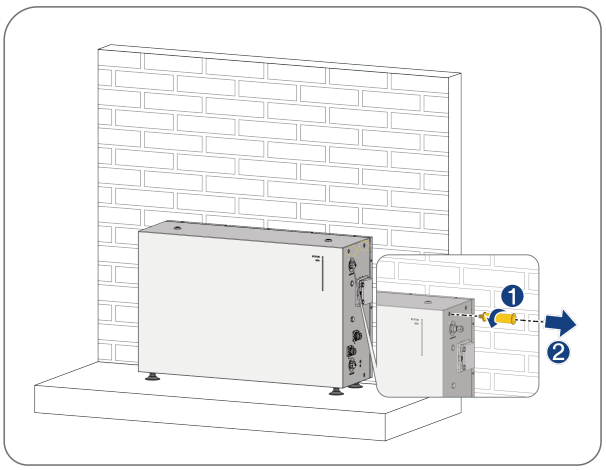

Step 3： Hold the L-bracket where it intends to be mounted on the wall and mark the position of the holes. Please pay attention that there may be power cables or other supply lines (e.g., gas or water) routed in the wall. Ensure that no cables or or other supply lines are laid in the wall, which could be damaged when drilling holes.

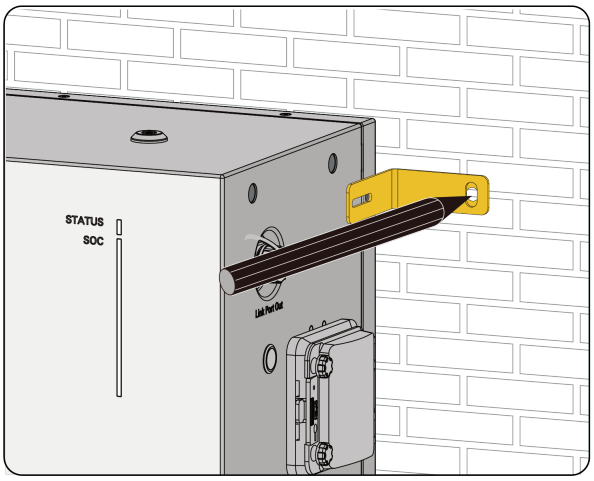

Step 4： Set the L- bracket aside for later use. Drill a hole at the marked position, with a diameter of 10 mm and a depth of 70 mm. Keep the hammer drill bit perpendicular to the wall surface during drilling to avoid angled holes. Clear dust and debris from the drilled hole. Insert the expansion bolt into the hole, tap it fully into place with a rubber mallet, and then tighten the nut using a wrench. After securing the expansion bolt in position, remove the nut, spring washer, and flat washer, and store these components safely for subsequent assembly. Repeat the above steps on the opposite side of the battery.

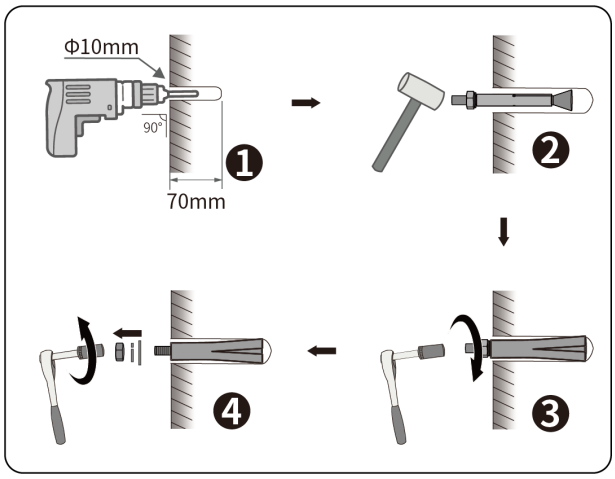

⚠ CAUTION

Damage to power cables and pipes can cause personal injury!

The walls may contain electrical cable or pipes (for example, gas or water).

- Ensure that power cable or pipes are not damaged when drilling.

Step 5： Secure the L- bracket with expansion bolts. Repeat the above steps on the opposite side of the battery.

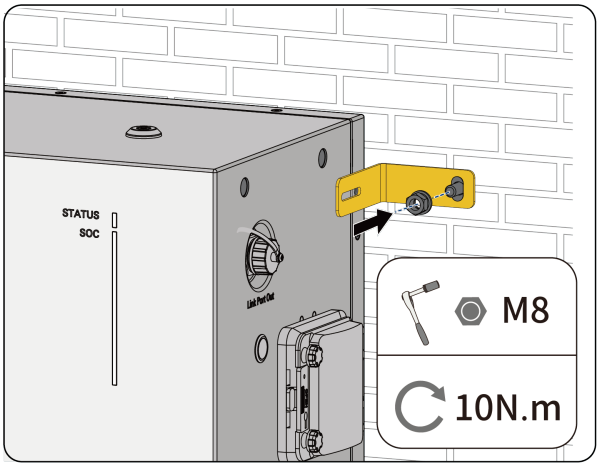

Step 6： Fix two L-brackets on both sides of the battery with the supplied screws(M5×14), using a Phillips screwdriver to tighten it (torque: 4 Nm). Repeat the above steps on the opposite side of the battery.

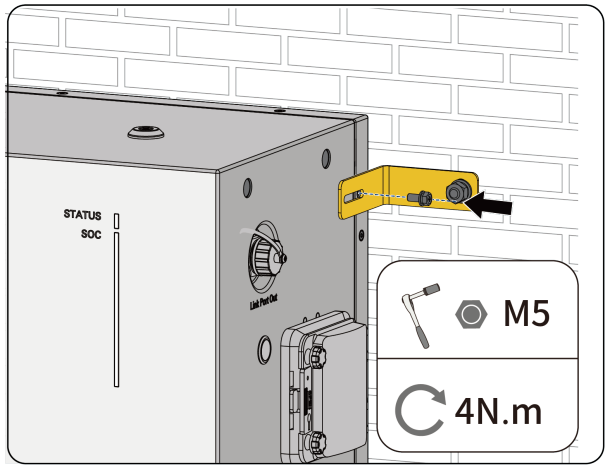

ℹ Install the same on both sides.

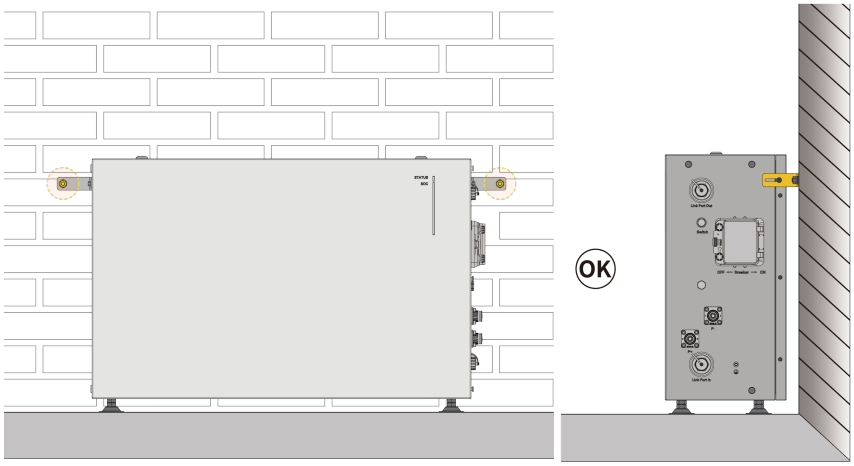

Complete the installation.

5.3 Mounting with parallel batteries application

After completing the installation of the first battery according to the requirements of section 5.2, remove the feet from the remaining battery modules and move them to the designated installation position using the handle; all subsequent battery modules shall be aligned, installed and secured one by one in strict accordance with the standard procedure in section 5.2.

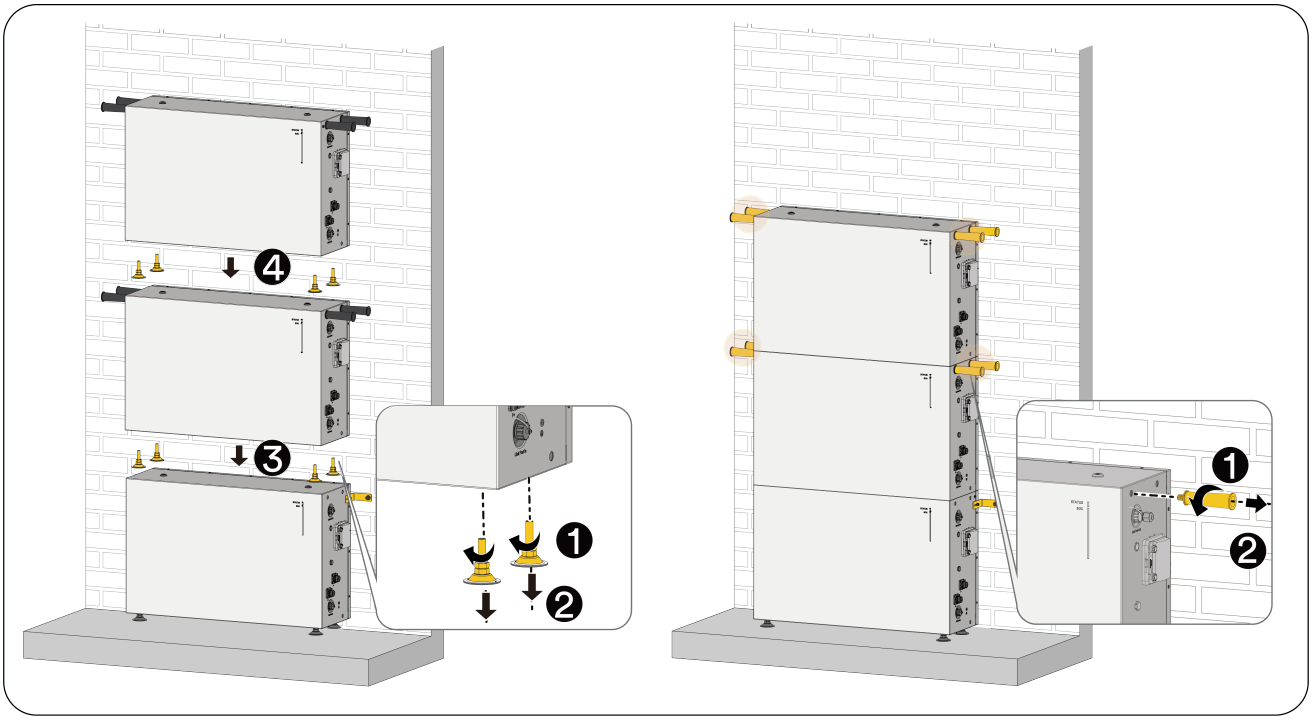

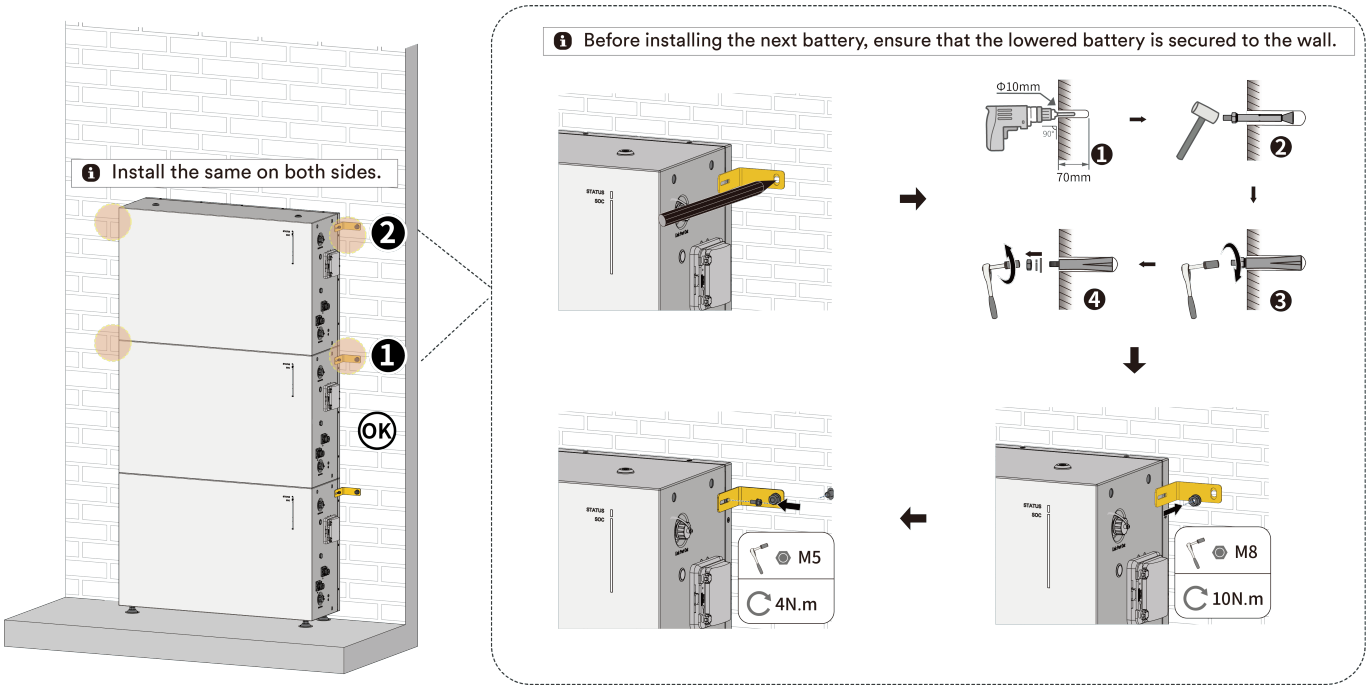

Complete the installation.

6 Electrical connection

6.1 Overview of the connection area

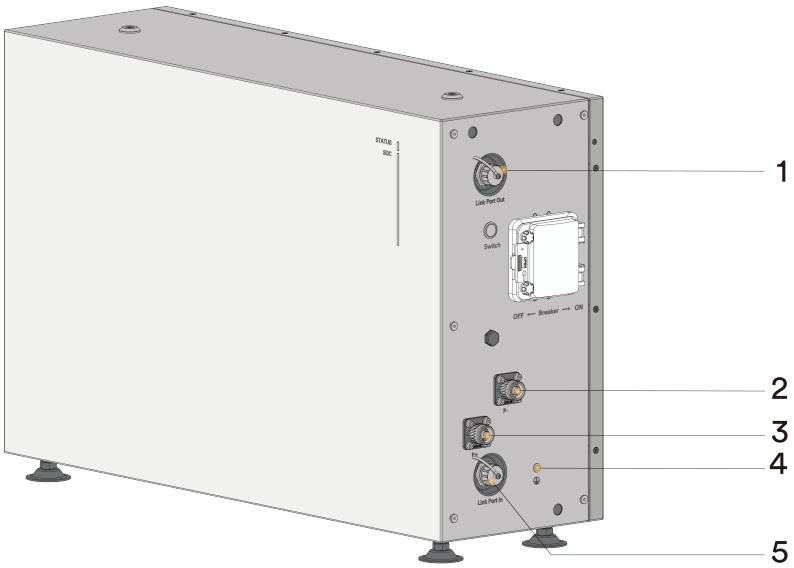

Figure shown here is for reference only. The actual product received may differ!

Object	Description
1	Link port out
2	P-
3	P+
4	Grounding
5	Link port in

6.2 Connecting the grounding conductor

Procedure:

Step 1: Ensure the circuit breaker of the BS is off.

Step 2: Attach the provided grounding cable using the M5×14 screw. Tighten with a Phillips screwdriver (torque: 4 N·m).

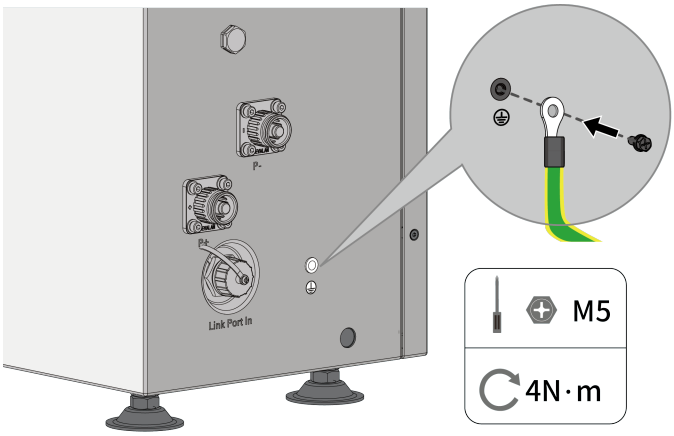

Complete the installation.

6.3 Connecting the power cable and network cable with single battery application

- Before connecting the battery, check the polarity (positive and negative terminals) of the DC connector.
- The DC cable connected to the battery's positive terminal must be mated with the positive DC connector.The DC cable connected to the battery's negative terminal must be mated with the negative DC connector.

Step 1: Ensure that BS breaker is switched off and ensure that it cannot be accidentally turned on.

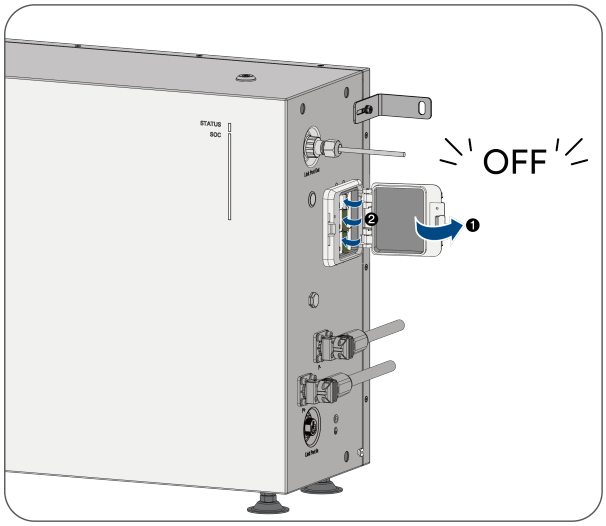

Step 2: Connect the supplied power cables to the DC connectors on the BS. (P+ cable connect to the P+ terminal and P- cable connect to the P- terminal).

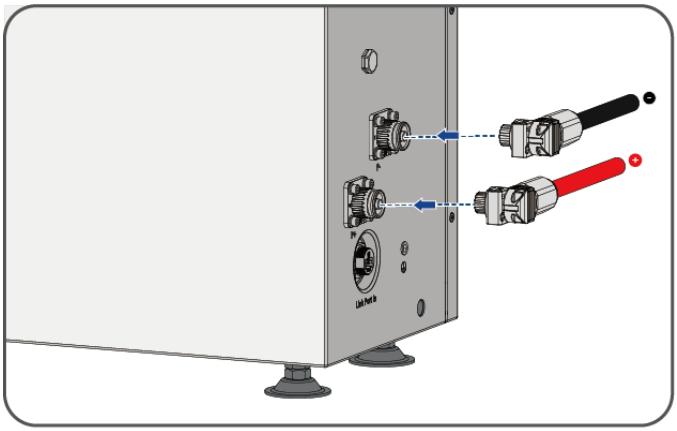

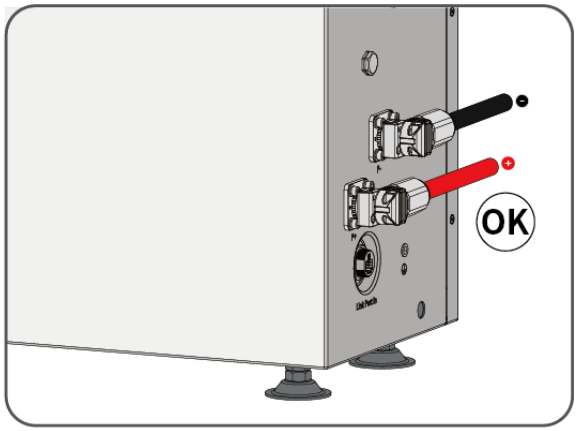

Step 3: Connect the "Link Port Out" of the BS to the BMS port of the inverter. Tighten the cable gland and the insulator.

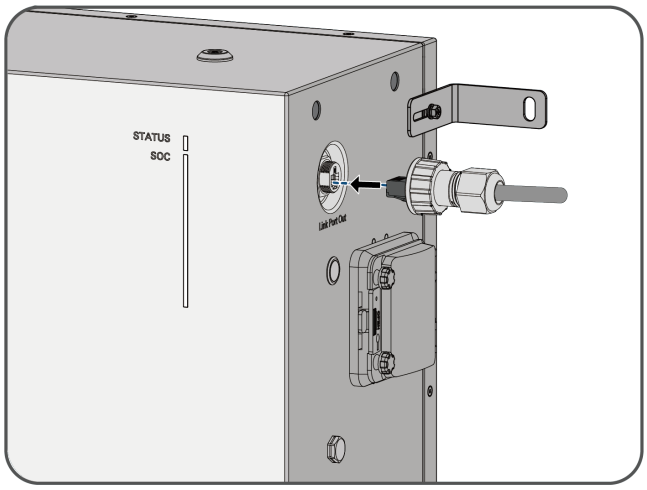

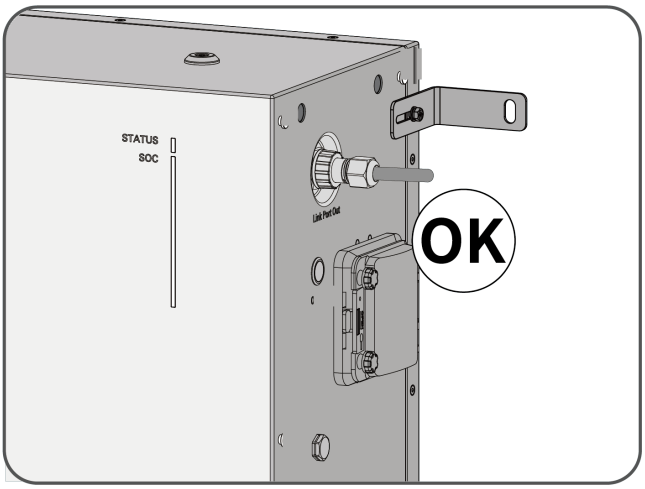

Step 4: Connect the terminating resistor or network cable to the “Link Port In” of the BS.

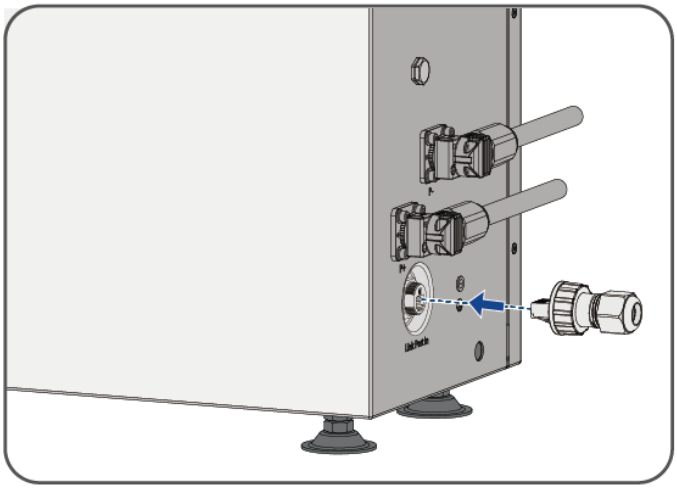

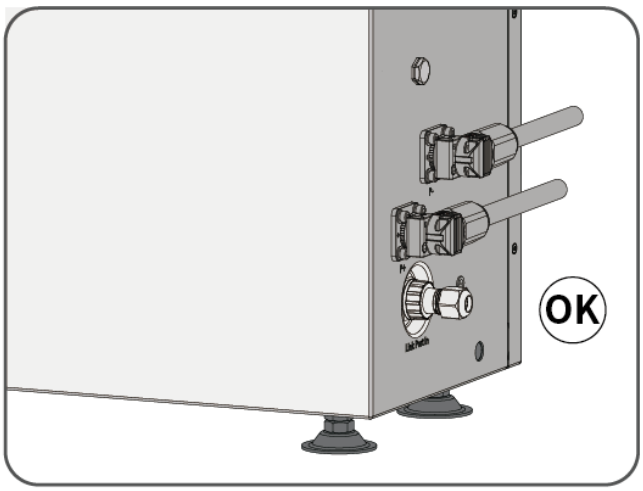

Step 5: For connection methods of the inverter ports, please refer to the relevant user manual.

Step 6: Install decorative cover. Take out the decorative cover from the accessory package, align the holes on the decorative cover with the stepped screws, and push it in until the decorative cover is firmly secured to the side of the battery.

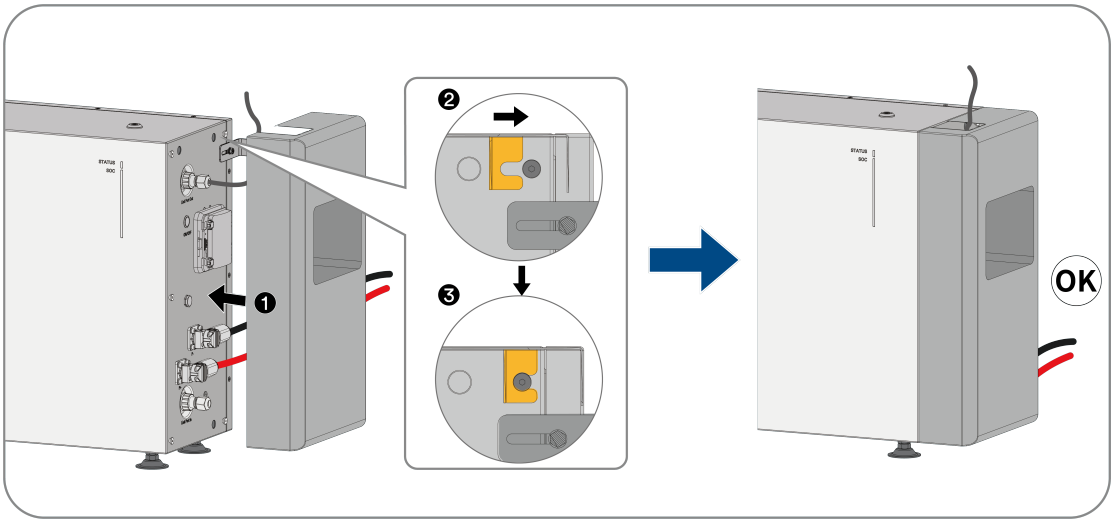

If multiple BSs are to be connected in parallel, then connect as follows:

- Connect the “Link Port In” of the first BS to the “Link Port Out” of the adjacent BS (daisy chain).
- Install the terminating resistor to the “Link Port In” of the last BS in the daisy chain.

6.4 Connection the power cable and network cable with parallel batteries application

Step 1: For stacked battery modules, connect as shown in the diagram below (connect the P+ power line to the P+ terminal and the P- power line to the P- terminal).

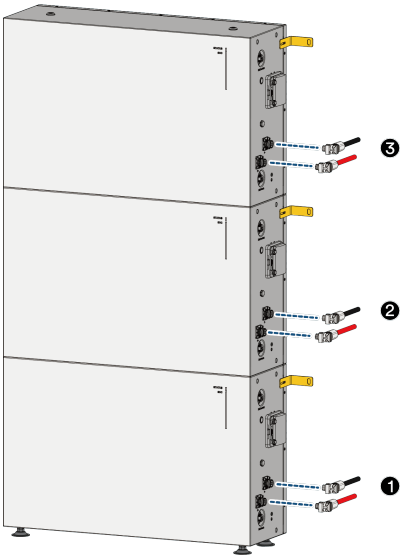

Step 2: Connect the "Link Port Out" of the uppermost battery module to the inverter's battery port using the supplied communication cable. Connect the "Link Port Out" and "Link Port In" of the mid-layer modules with the supplied parallel communication cable. Use the provided terminal resistor to close the "Link Port In" on the lowest module.

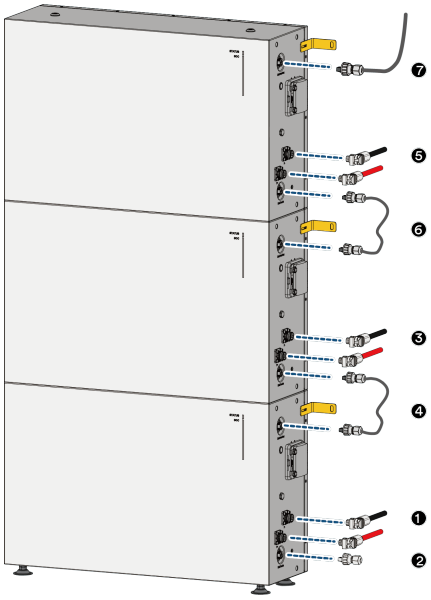

The complete connection is shown below:

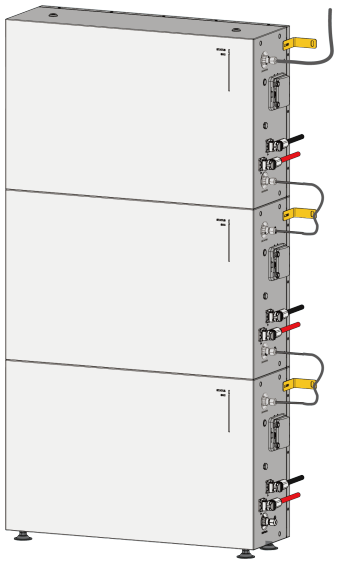

Step 2: Follow the steps for installing the decorative cover on a single battery to complete the remaining installations.

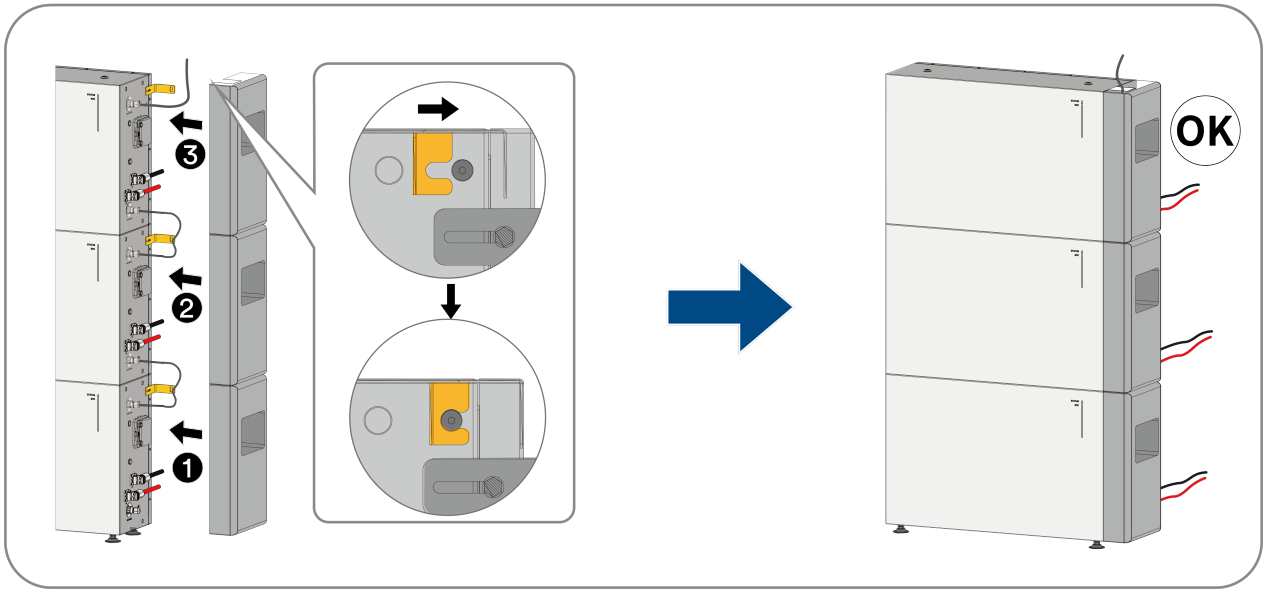

6.5 System wiring diagram

Single system connection diagram

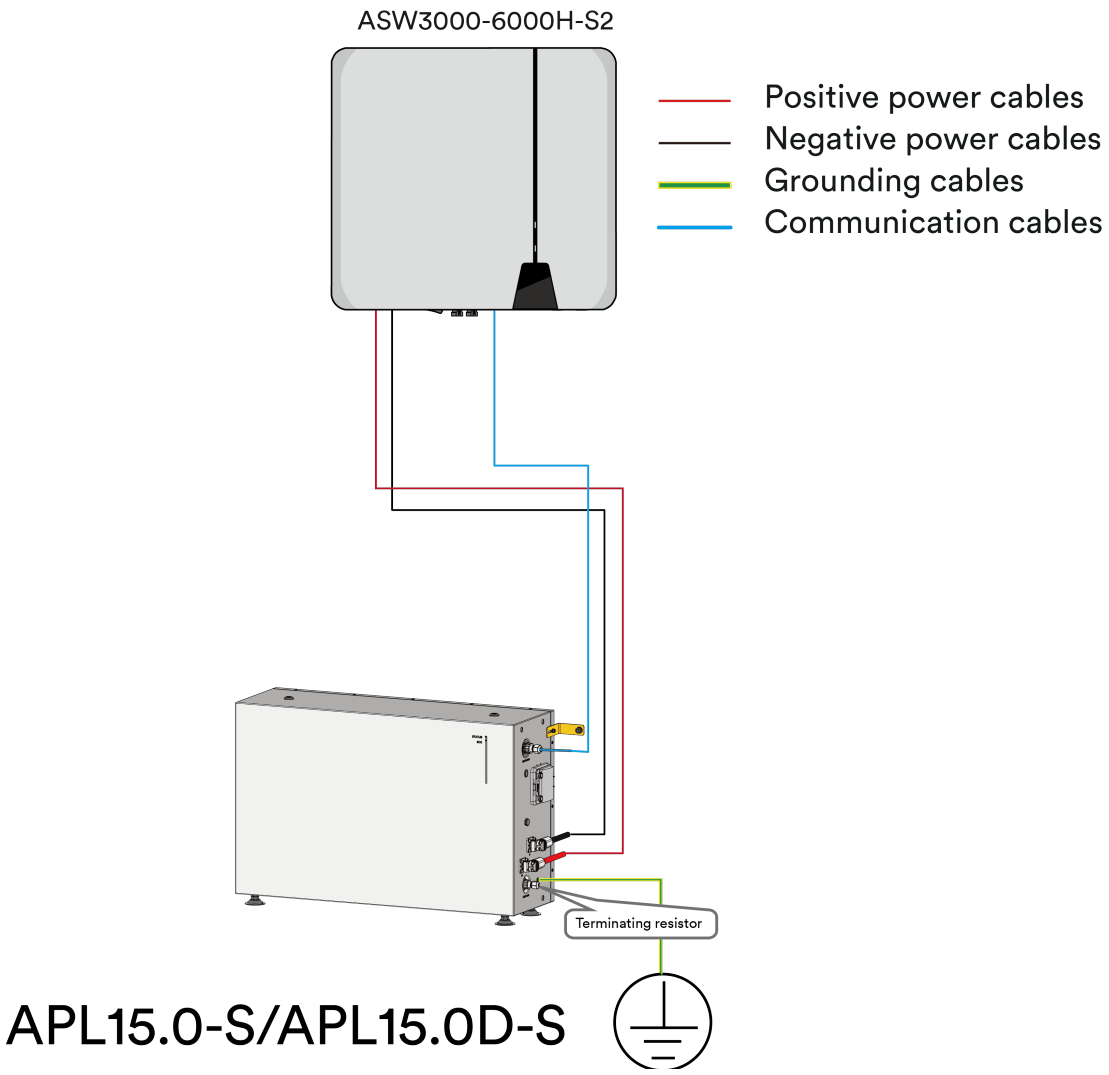
ASW3000-6000H-S2
Positive power cables
Negative power cables
Grounding cables
Communication cables
Terminating resistor
APL15.0-S/APL15.0D-S

Parallel system connection diagram

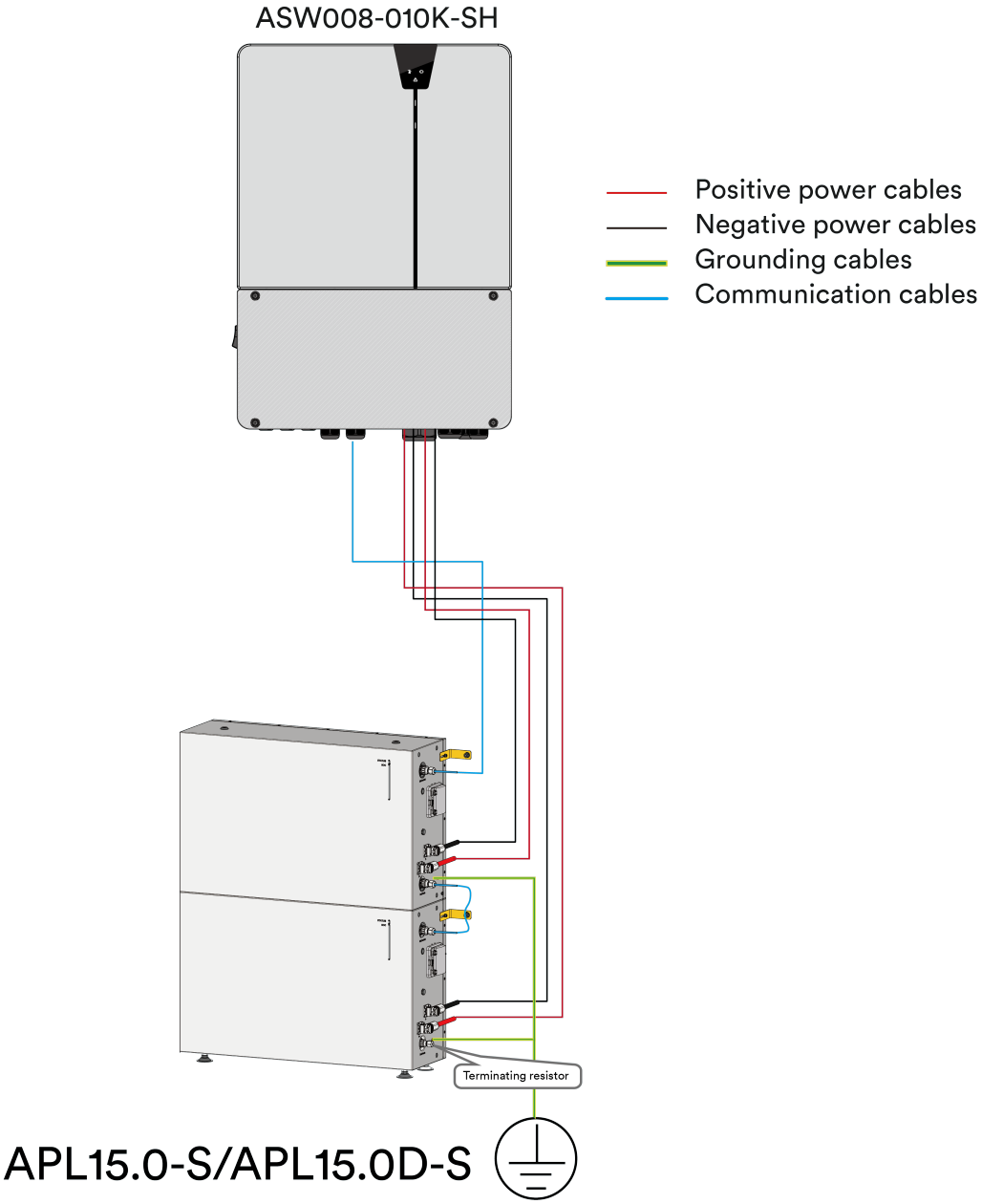

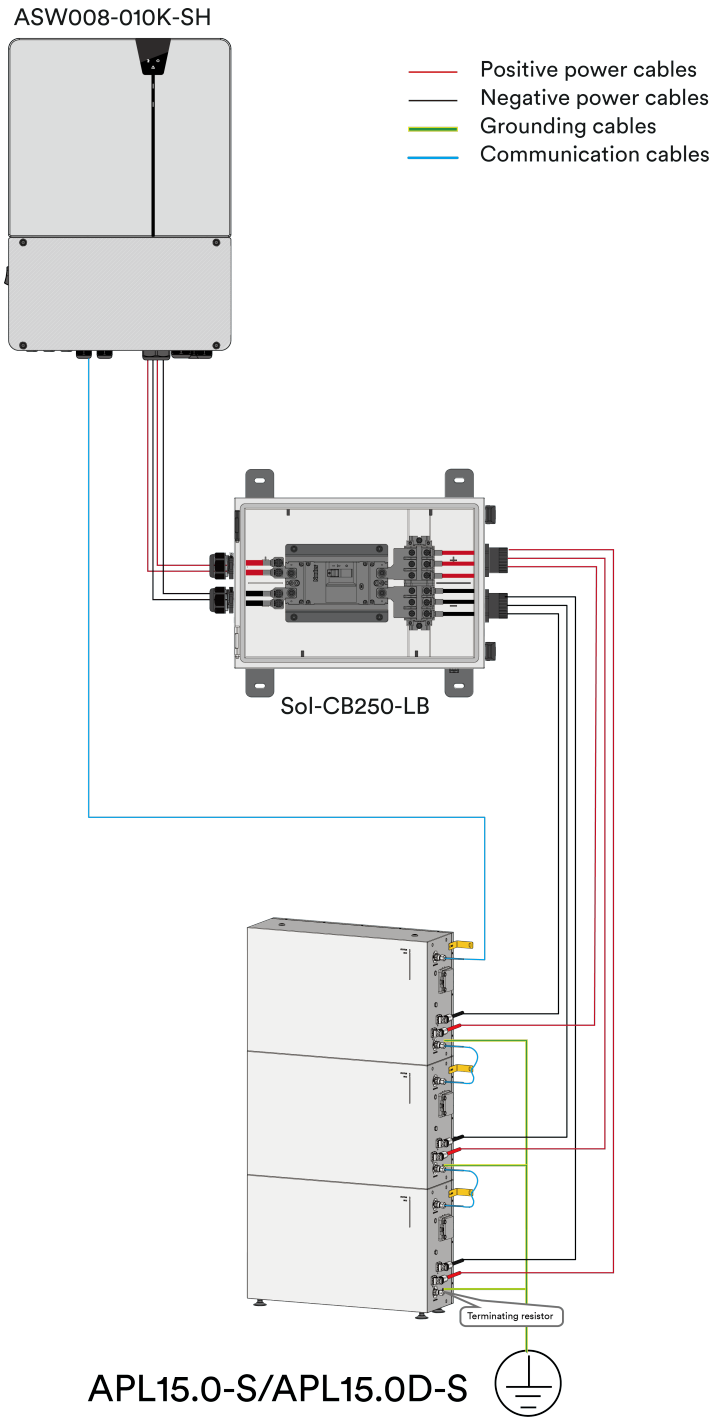

NOTICE

Damage to the battery due to not configuring the system as required!

Configure the system according to the requirements, otherwise it may affect the performance of the battery system or damage it.

- The length of the power cables from the battery to the combiner box should be same.
- The number of modules for each stacked battery in a parallel system must be the same.
- The total power cable length between each battery and the inverter should be less than 20 meters.
- Recommend using the combine box Sol-CB250-LB from Solplanet.
- If the combiner box Sol-CB250-LB is not used, the parallel connection device should meet the following requirements.

  a) No less than for the outdoor use.

  b) Maximum Operating Voltage:60V DC.

  c) Maximum Input Current for each battery string :210A DC.

  d) Maximum Output Current: 210A DC.

7 Commissioning and operating

7.1 Inspection before commissioning

Check the following items before commissioning the BS:

- Ensure inverter is compatible with the battery.
- Ensure the inverter is correctly mounted as per Solplanet's guidelines, please refer to the inverter manual.
- Ensure the battery is properly installed and secured in accordance with this manual.
- Ensure the circuit breaker between the battery system and the inverter is off.
- Ensure the communication cables and DC cables are correctly and securely connected.
- Ensure the ground terminal on the BS is grounded.
- Ensure the DC power cables have been installed with the correct polarity.

7.2 Commissioning procedure

If all of the items mentioned above have been met then proceed as follows to commission and start-up the battery for the first time:

Step 1: Turn the circuit breaker on the BS to the "ON" position.

Step 2: Press the button for 1s, and the BS will enter into working mode.

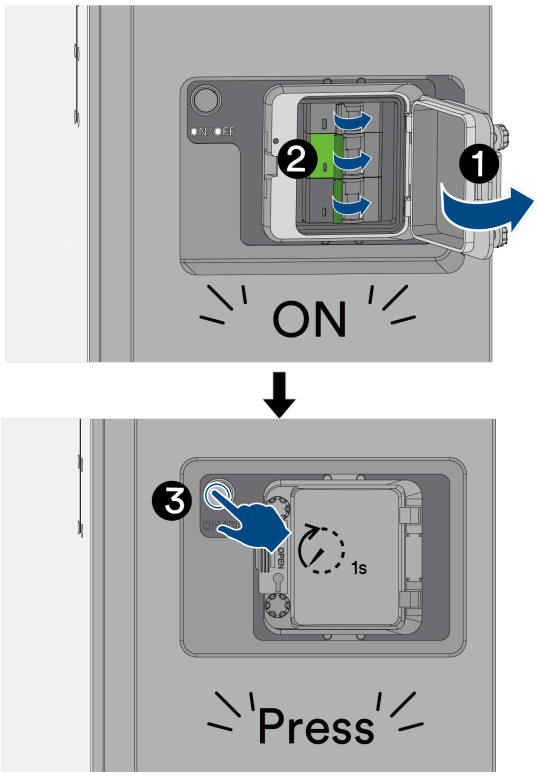

Step 3: Check whether the battery indicator of the inverter is on.

Step 4: Start inverter according to inverter start-up procedure.

Step 5: Commission the inverter according to the inverter commissioning procedure using the Solplanet App.

Step 6: Read the battery status information using the Solplanet App and confirm that the BS is communicating with the inverter, observe the LED's on the BS to determine the current status.

Recommended standard charging and discharging procedure as follow:

- Charging at a constant current with 0.5P until the SOC reach to 80%, and then charging to 100% SOC with 0.3P at 25°C.
- Discharging at a constant current with 0.5P until the SOC reach to 20%, and then discharging to 0% SOC with 0.3P at 25°C.

8 Decommissioning the product

CAUTION

Risk of injury due to weight of the battery module!

Injuries may result if the battery module is lifted incorrectly or dropped while being transported or installed.

- Transport and lift the battery module carefully. Take the weight of the battery module into account.
- Wear suitable personal protective equipment for all work on the battery system.

DANGER

Danger to life from electric shock due to live DC cables or conductors at the battery system !

The DC cables connected to the battery system may be live. Touching the DC conductors or the live components leads to lethal electric shocks..

- Do not touch non-insulated cable ends.

Procedure:

Step 1: Switch off the inverter by first turning off the AC circuit breaker downstream of the AC output of the inverter and second by turning off the inverter DC switch.

Step 2: Pressing the ON/OFF button for 1s to switch off the BS and include allowable time for the batteries completely discharged.

Step 3: Switch off the any external DC switches between the inverter and the BS if there are any.

Step 4: Take off the nuts on the cable glands on the BS operating panel.

Step 5: Remove all cables from the BS.

Step 6: Loosen the screws on L-brackets between the BS and the wall and remove the L-brackets.

Step 7: Loosen the screws between BS and the battery modules and base.

Before lifting the battery module, ensure that the screws on both sides of them are removed.

Step 8: Tighten the nuts on the cable glands on the operating panel.

Step 9: Remove the BS from the battery modules and then the battery modules from the base.

If the battery system is to be stored or shipped, pack the system using the original packaging or packaging that is suitable for the weight and dimensions of the system.

Dispose of the battery system in accordance with the locally applicable battery disposal regulations.

9 Technical data

Technical Specification		
Model		APL15.0D-S
Nominal energy*1		15.07 kWh
Usable energy*2		13.95 kWh
Nominal Voltage		48 V
Operating Voltage		37.5 V~54.75 V
Dimension (W*D*H)		760/237.5/480 mm
Weight		113.0 kg
Max. Continuous charging current		160 A
Max. Continuous discharging current		160 A
Rated DC power		7.68 kW
Rated charge / discharge power		7.68 kW
Max. charge / discharge power		7.68 kW
Communication		CAN
Country of manufacture		China
Operating temperature		Charge: 0°C ~ 55°C Discharge: --20°C ~ 55°C
Storage temperature range		-20°C ~ 60°C
Ingress protection rating		IP66
Display		SOC and status indicator, LED indicator
Installation		Indoor/Outdoor
Max. Operating altitude		4000 m (>3000 m derating)
Relative humidity		5%～95% no condensing
Cooling		Natural convection
Cell type		Lithium-iron phosphate (LiFePO4)
Life cycle		6000 times*3
Standard and Certification	Safety	IEC62619, IEC62040-1, IEC62477-1, IEC60730, IEC63056
	EMC	IEC61000-6-1, IEC61000-6-3, IEC61000-6-2, IEC61000-6-4
	Transportation	UN38.3

*1. Nominal energy is defined under the following conditions: 0.5C charge & discharge at 25 °C.

*2. Usable energy is defined under the following conditions: 93 % DOD, 0.2C charge & discharge at 25 °C.

*3. Cycle life is defined under the following conditions: 90 %DOD, 0.5C charge & discharge at 25 °C (One cycle a day), 70 %EOL.

10 Troubleshooting

When the yellow LED indicator solid on, it indicates that the battery is in an alarm state.

When the red LED indicator solid on, it indicates that the battery is in a fault state.

When the yellow LED indicator blinking, it indicates a battery communication loss.

If the red indicator solid on, the battery is faulty. Turn off the battery immediately and contact the manufacturer for after-sales service.

11 Maintenance

Cleaning

It is recommended that the battery system be cleaned every six months. If the enclosure is dirty, please use a soft, dry brush or a dust collector. Liquids such as solvents, abrasives, or corrosive liquids should not be used to clean the enclosure.

Maintenance

The battery module should be stored in an environment with a temperature range between -20°C ~ +60°C, and charged regularly according to the table below with no more than 0.5C to the SOC of 30% after a long time of storage.

Temperature	Relative humidity	Storage time	Original SOC
Below -20°C	/	Not allowed	/
0~25°C	35%~85%	⩽ 6 months	25%⩽SOC⩽50%
-20~60°C	35%~85%	⩽ 1 months	25%⩽SOC⩽50%
Above 60°C	/	Not allowed	/

NOTICE

Damage to the system due to under voltage!

- Charge the over-discharged system within seven days when the temperature is above 25°C.
- Charge the over-discharged system within fifteen days when the temperature is below 25°C.

12 Recycling and disposal

Dispose of the packaging and replaced parts according to the rules applicable in the country where the device is installed.

Do not dispose of the product together with the household waste but in accordance with the disposal regulations for electronic waste applicable at the installation site.

13 EU declaration of conformity

Within the scope of the EU directives:

-Electromagnetic compatibility directive 2014/30/EU

(L 96/79-106, March 29, 2014) (EMC)

-Low voltage directive 2014/35/EU (L 96/357-374, March 29, 2014) (LVD)

Restriction of the use of certain hazardous substances 2011/65/EU

(L 174/88, June 8, 2011) and 2015/863/EU (L 137/10, March 31, 2015) (RoHS)

AISWEI New Energy Technology (Yangzhong) Co., Ltd. confirms here with that the products described in this document are in compliance with the fundamental requirements and other relevant provisions of the above mentioned directives.

The entire EU Declaration of Conformity can be found at www.solplanet.net.

14 Service and warranty

If you have any technical problems concerning our products, please contact Solplanet service.

We require the following information in order to provide you with the necessary assistance:

- Battery serial numbers
- Battery type and model
- Inverter device type
- Inverter serial number
- Type and number of connected PV modules
- Mounting location
- Installation date

Warranty terms and conditions can be downloaded at www.solplanet.net.

When the customer needs warranty service during the warranty period, the customer must provide a copy of the invoice, factory warranty card, and ensure the electrical label of the inverter is legible. If these conditions are not met, Solplanet has the right to refuse to provide with the relevant warranty service.

15 Contact

EMEA

Service email: service.EMEA@solplanet.net

APAC

Service email: service.APAC@solplanet.net

LATAM

Service email: service.LATAM@solplanet.net

AISWEI Pty Ltd.

Hotline: +61 390 988 674

Add.: Level 40, 140 William Street, Melbourne VIC 3000, Australia

AISWEI New Energy Technology (Yangzhong) Co., Ltd.

Hotline: +86 400 801 9996

Add.: No. 8 Gangxing Road, Yangzhong Jiangsu, China

https://solplanet.net/contact-us

Scan QR code:

Android

Scan QR code:

iOS

Solplanet

AISWEI Technology Co., Ltd.