Solplanet

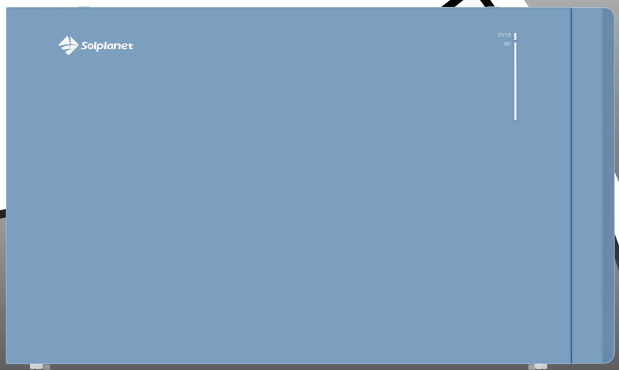

Quick Installation Guide

APL15.0-S/APL15.0D-S

Android

iOS

1 General Information

This quick installation guide should be read together with the user manual. In case of doubt and uncertainties, the content in the user manual takes precedence over the content in this guide.

The contents of this guide may be updated or revised due to on-going product development and continuous improvement. The information in this guide is subject to change without notice. The latest version of this document and the user manual for installation, commissioning, configuration and decommissioning are to be found in PDF format at www.solplanet.net.

2 Safety

2.1 Intended use

The product is a residential low-voltage Li-ion battery system with an integrated BMS, designed for solplanet solar hybrid inverters. It supports on-grid, off-grid, and backup modes with compatible solplanet inverters. Suitable for indoor and outdoor use within a temperature range of -20°C to 55°C.

The battery system must only be used as stationary equipment.

Modifications to the product are prohibited without written approval from Solplanet. Solplanet will not be held liable for any damage caused by such illegal changes.

The product is not suitable for supplying life-sustaining medical devices. Please ensure that no personal injury would lead due to the power outage of the battery system.

The product must only be used in countries for which it is approved by Solplanet and the grid operator.

Use the product only in accordance with the information provided in this guide , the user manual and with the locally applicable standards and directives. Any other application may cause personal injury or damage to property.

The type label must be permanently attached to the product and must be in a legible condition.

This document does not replace any regional, state, provincial, federal or national laws, regulations or standards that apply to the installation, electrical safety and use of the product.

2.2 Important safety instructions

The product has been designed and tested strictly according to the international safety requirements. As with all electrical or electronical devices, there are residual risks despite careful construction. To prevent personal injury and property damage and to ensure long-term operation of the product, read this section carefully and observe all safety information at all times.

⚠ DANGER

Danger to life due to DC voltages of the battery!

When the battery system is connected to the inverter and the ON/OFF switch is ON, the batteries generate DC voltage, energizing the DC cable and live components.

- Do not touch non-insulated parts or cable ends.
- Do not touch the DC conductors.
- Do not touch any live components of the product.
- Do not open the product.
- All work on the product must only be carried out by qualified personnel who have read and fully understood all safety information contained in this document and the user manual.
- Disconnect the product from all voltage and energy sources and ensure it cannot be reconnected before working on the product.
- Wear suitable personal protective equipment, in accordance with local regulations, for all work on the product.

⚠ WARNING

Danger to life due to risk of fatal electric shock from damages to the measuring device caused by overvoltage!

Overvoltage can damage a measurement device and result in voltage being present in the enclosure of the measuring device. Touching the live enclosure of the measuring device results in death or lethal injuries due to electric shock.

- Only use measuring devices with a measurement span equal to or higher than the maximum voltage rating of the product.

⚠ WARNING

Risk of injury due to weight of product!

Injuries may result if the product is incorrectly handled or dropped while being transported or mounted.

- Transport and lift the product carefully. Take the weight of the product into account.
- Wear suitable personal protective equipment, in accordance with local regulations, for all work on the product.

NOTICE

Damage to the battery system due to electrostatic discharge!

Internal components of the battery system can be irreparably damaged by electrostatic discharge.

- Ground yourself before touching any component.

NOTICE

Damage to the battery due to particles and water!

Particles such as dust and sand can damage the battery and impair its functionality.

- Open the battery cover is forbidden!

2.3 Symbols on the label

	Beware of a danger zone! This symbol indicates that the product must be additionally grounded if additional grounding or equipotential bonding is required at the installation site.
	Beware of DC voltage and operating current! The battery operates at DC voltage and current. Work on the battery must only be carried out by skilled and authorized electricians.
	Beware of explosion! The battery is an electrochemical device and poses a risk of explosion under extreme conditions. Maintain a safe distance if such a situation arises.
	Beware of danger to children! The battery must be inaccessible to children.
	Beware: Flammable! Keep the battery system away from open flames or ignition sources.
	WEEE designation Do not dispose of the product together with the household waste. Dispose the product in accordance with local disposal regulations for electronic waste applicable in the country of installation.
	CE marking The product complies with the requirements of the applicable EU directives.
	RCM (Regulatory Compliance Mark) The product complies with the requirements of the applicable Australian standards.
	The battery is recyclable The battery can be recycled by a professional recycling organization, please refer to the relevant local regulations.
	Observe the documentation Observe all documentation supplied with the product.

3 System Wiring Diagram

Single system connection diagram

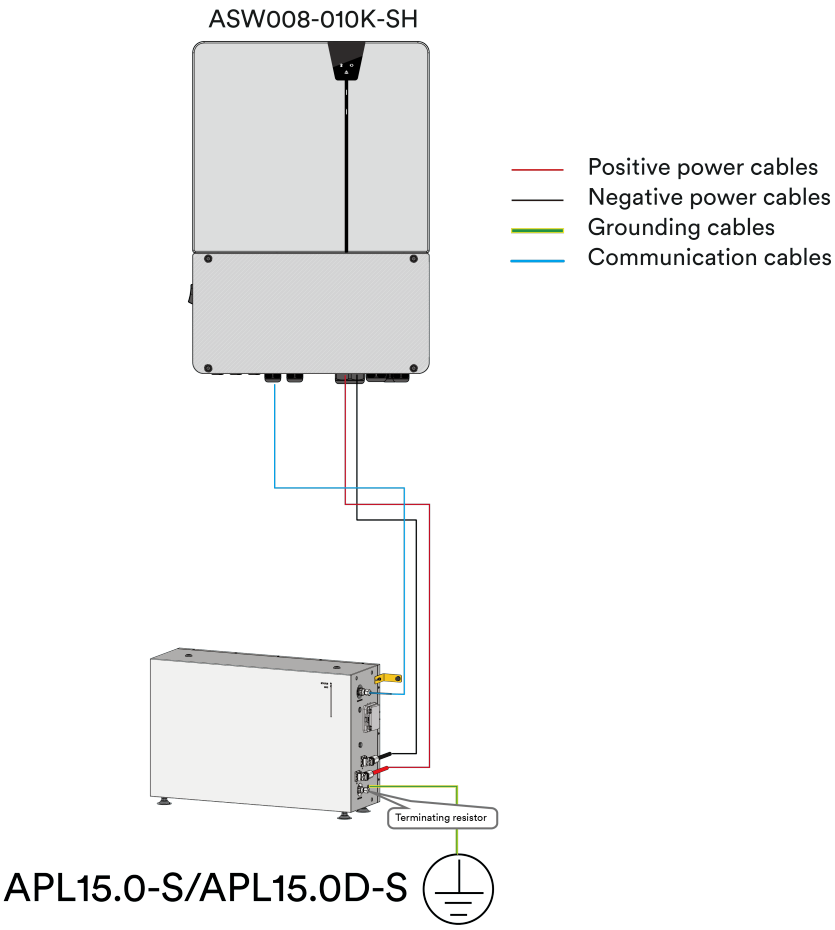

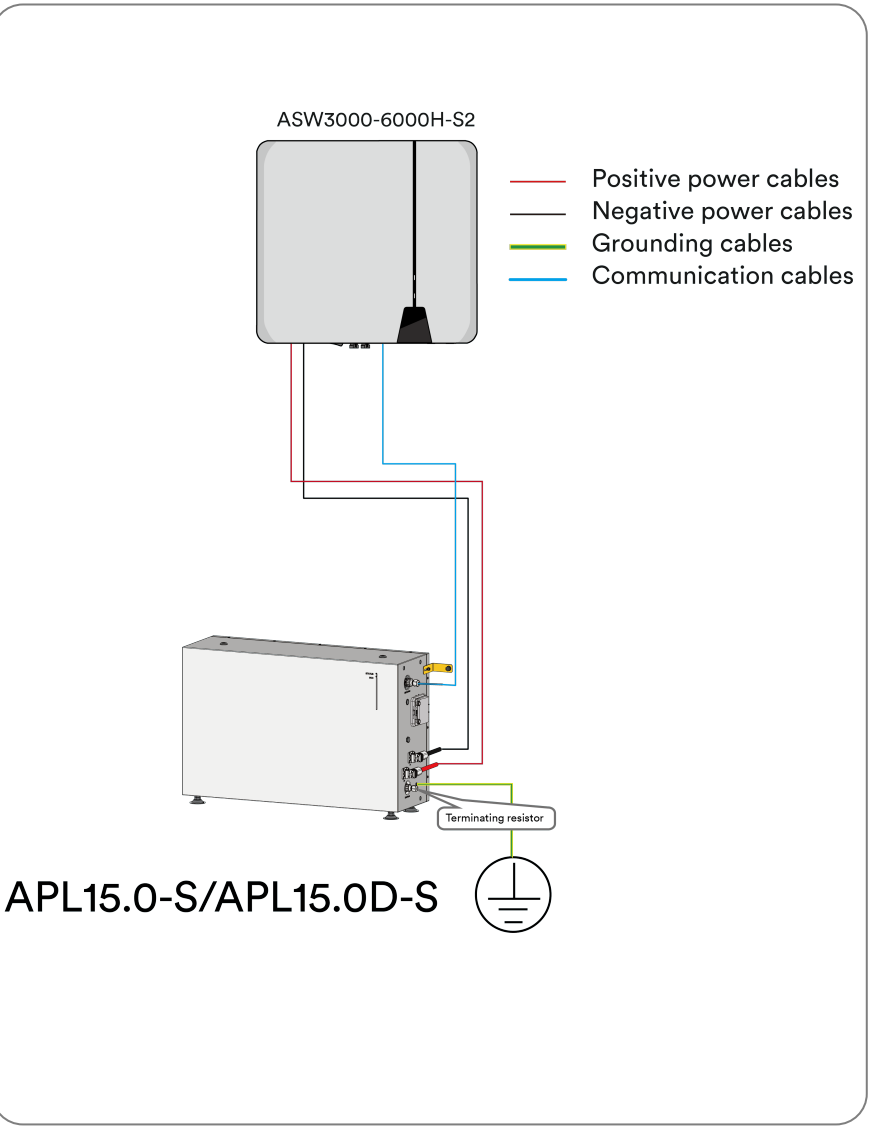
ASW3000-6000H-S2
Positive power cables
Negative power cables
Grounding cables
Communication cables
Terminating resistor
APL15.0-S/APL15.0D-S

Parallel system connection diagram

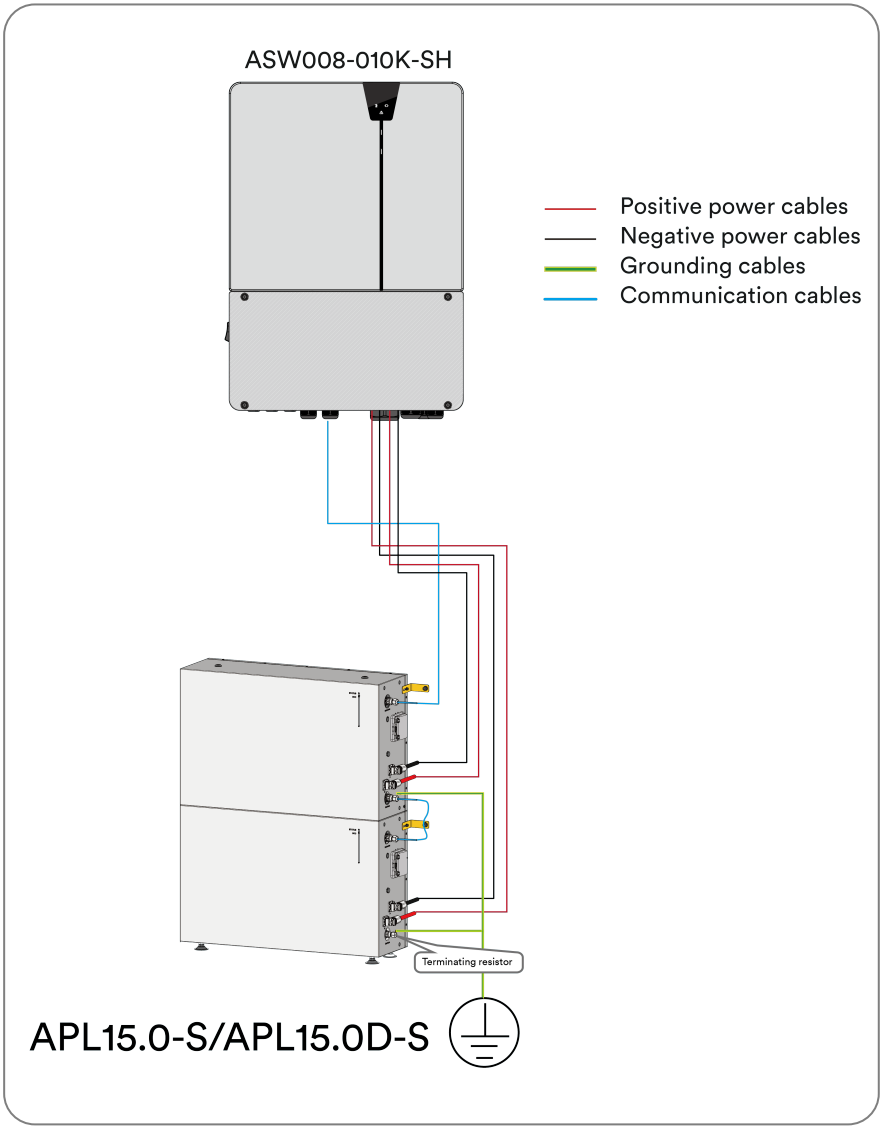

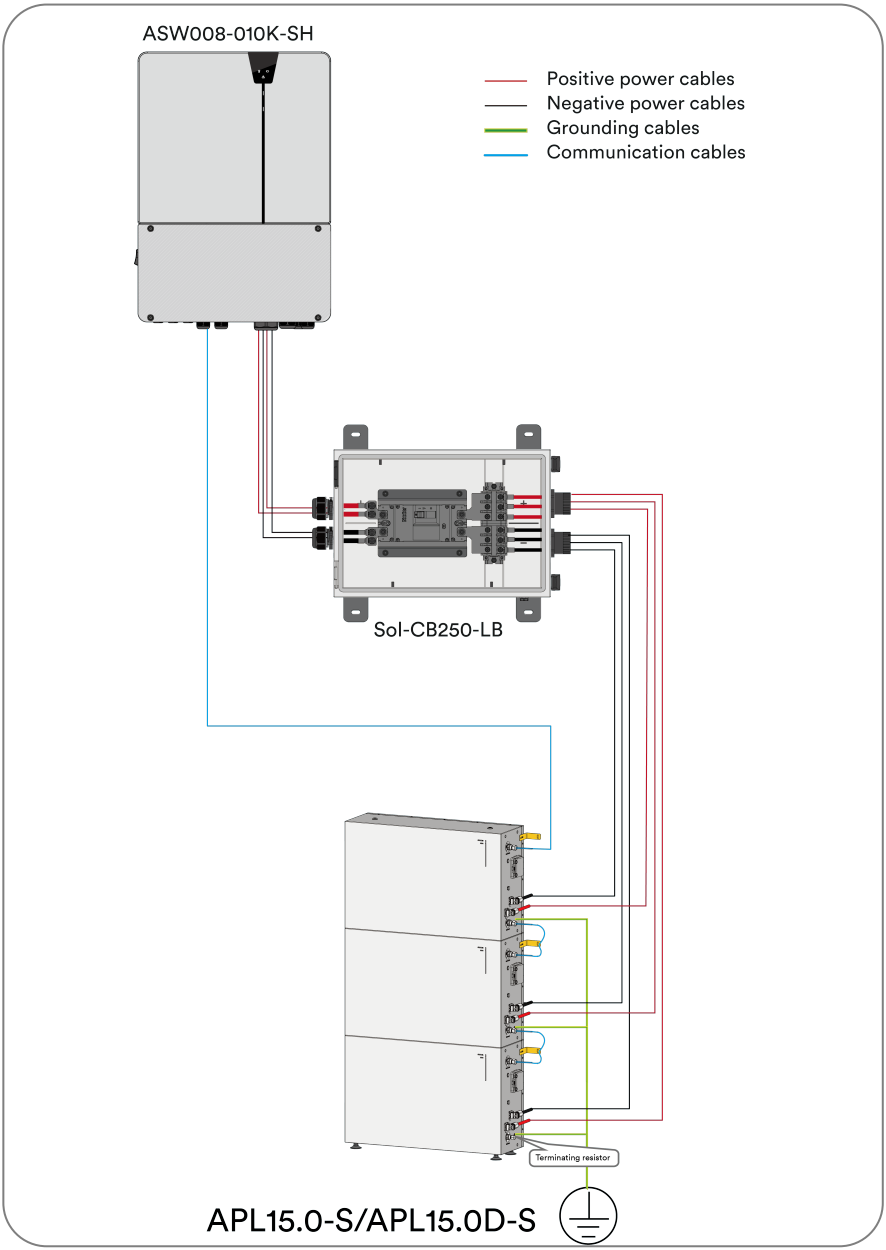
ASW008-010K-SH
Positive power cables
Negative power cables
Grounding cables
Communication cables
Sol-CB250-LB
Terminating resistor
APL15.0-S/APL15.0D-S

4 EU Declaration of Conformity

Within the scope of the EU directives:

-Electromagnetic compatibility directive 2014/30/EU

(L 96/79-106, March 29, 2014)(EMC)

-Low voltage directive 2014/35/EU (L 96/357-374, March 29, 2014)(LVD)

Restriction of the use of certain hazardous substances 2011/65/EU

(L 174/88, June 8, 2011) and 2015/863/EU (L 137/10, March 31,2015) (RoHS)

AISWEI New Energy Technology (Yangzhong) Co., Ltd confirms herewith that the products described in this document are in compliance with the fundamental requirements and other relevant provisions of the above mentioned directives. The entire EU Declaration of Conformity can be found at www.solplanet.net.

5 Overview

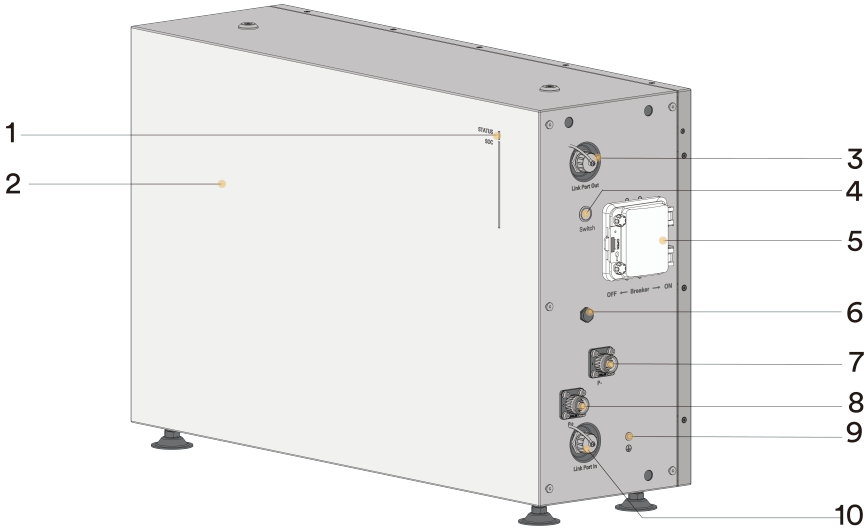

Object	Description
1	LED indicator
2	Battery Module
3	Link port out
4	Button Switch
5	Circuit breaker
6	Vent valve
7	P-
8	P+
9	Grounding terminal
10	Link port in

6 Scope of Delivery

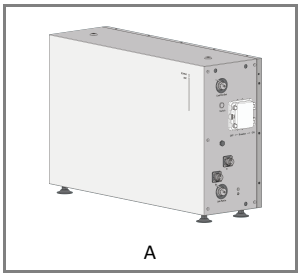
A

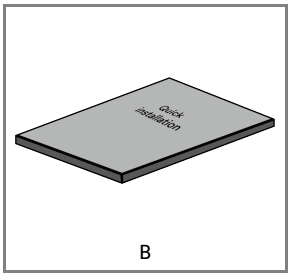

B

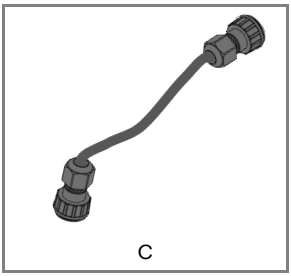
C

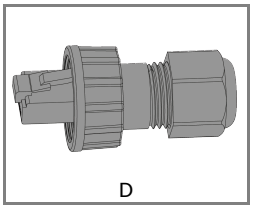
D

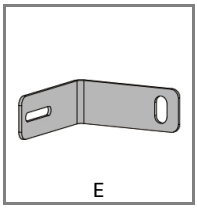
E

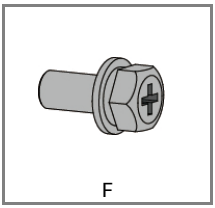
F

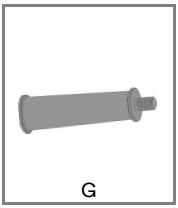
G

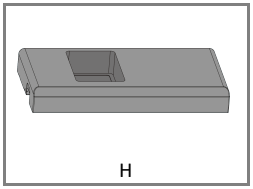
H

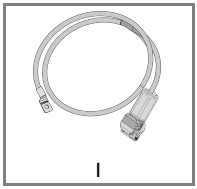
I

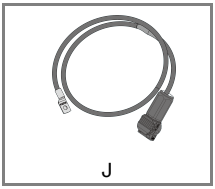
J

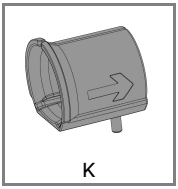
K

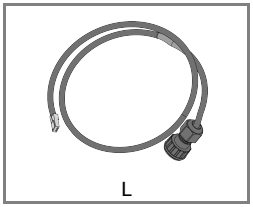
L

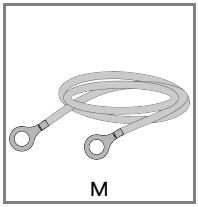
M

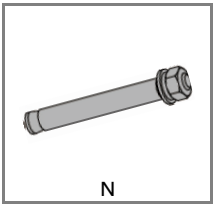
N

Object	Description	Quantity
A	Battery Module	1
B	Quick installation guide	1
C	Parallel Communication Cable	1
D	Terminating resistor	1
E	L-bracket	2
F	Hexagon screw（M5x14）	3
G	Handle	4

H	Decorative cover	1
I	Positive battery Cable	1
J	Negative battery Cable	1
K	Finger-Worn Unlocking Tool	1
L	BMS communication cable	1
M	PE Cable	1
N	Expansion Bolt (M8*80)	2

7 Mounting Environment

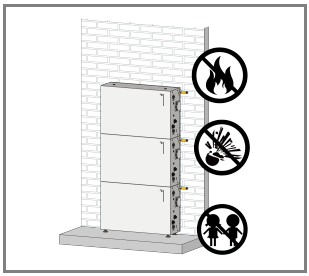

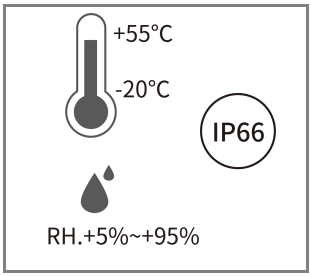

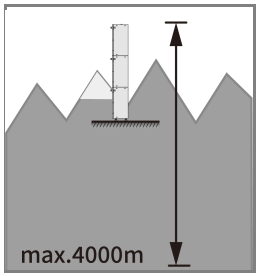

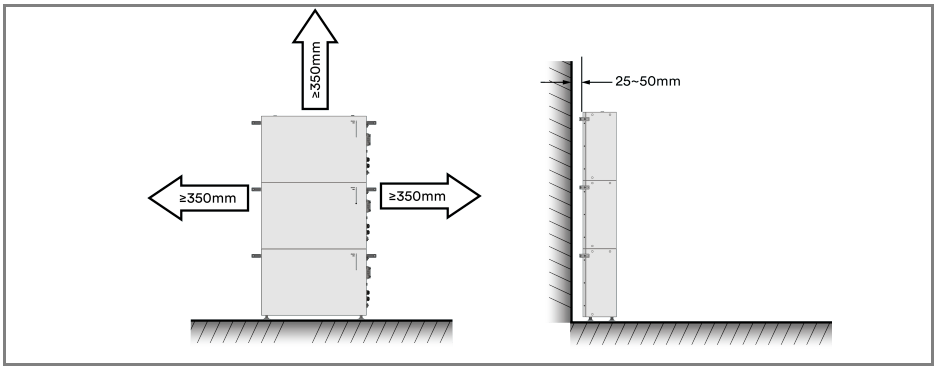

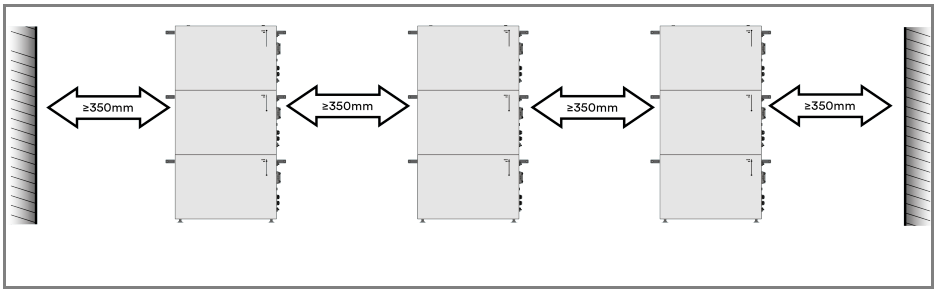

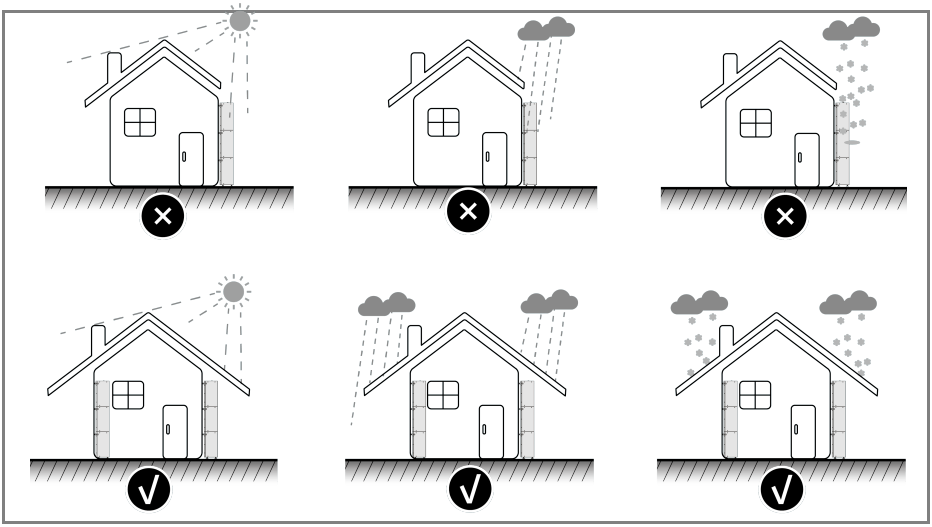

8 Dimensions

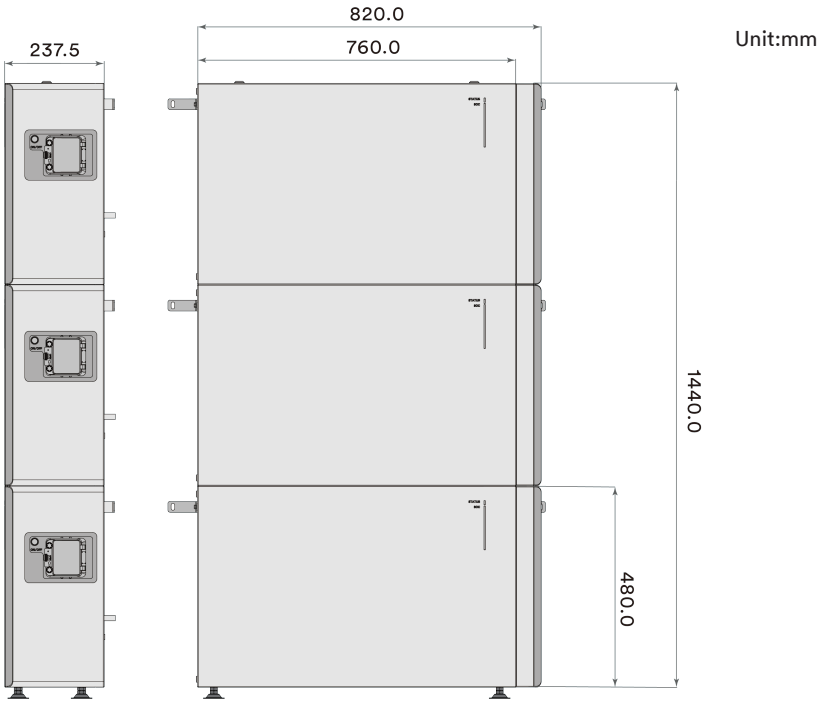

9 Mounting

9.1 Take out the battery

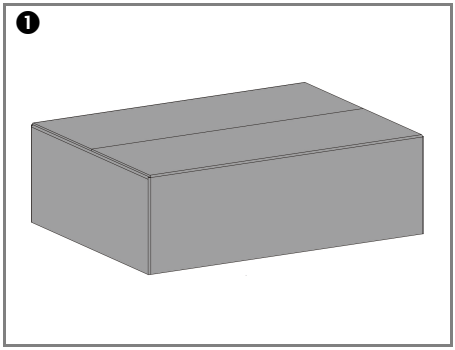

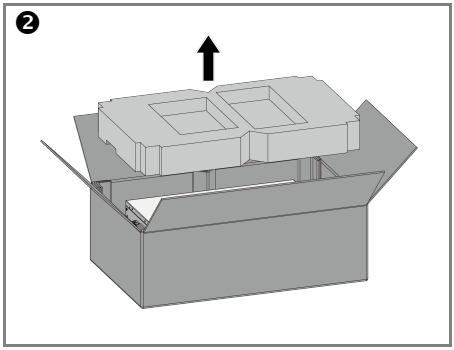

9.2 Manual transport

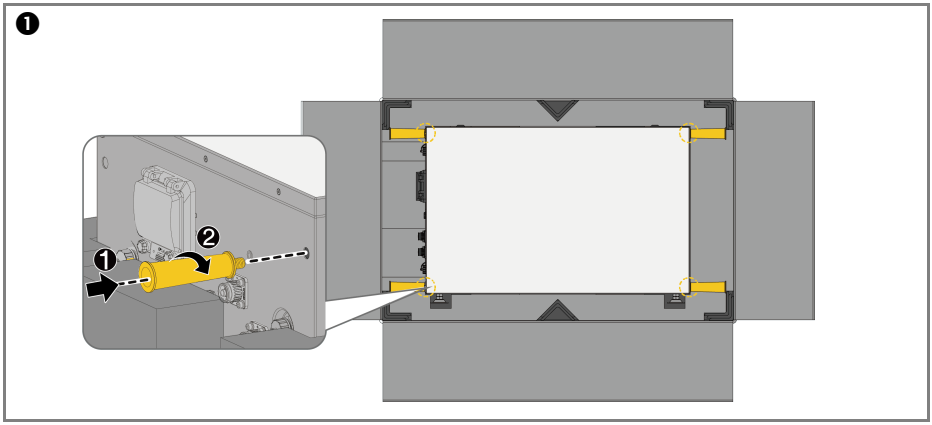

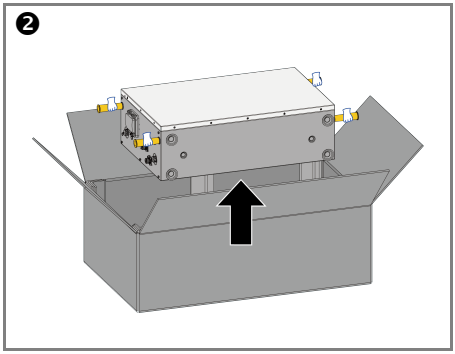

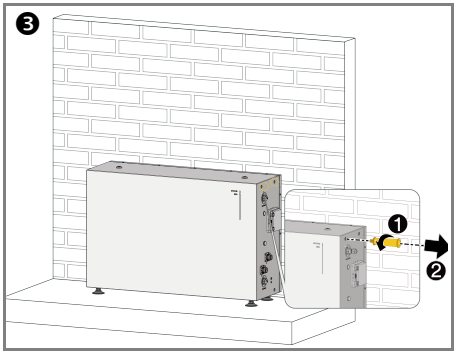

9.3 Mounting

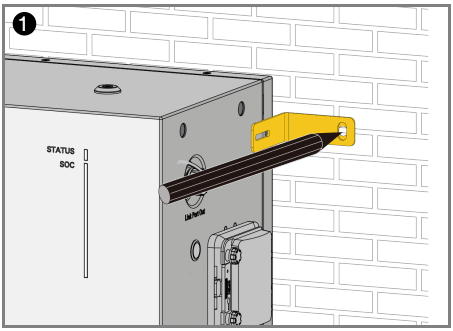
1
STATUS
SOC

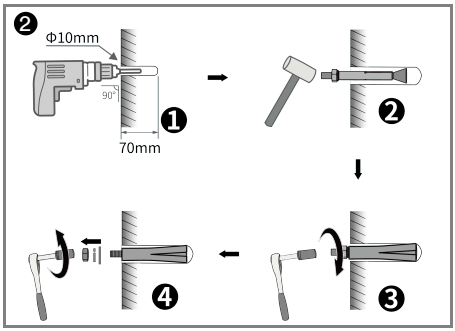
2
Φ10mm
90°
70mm
1
2
3
4

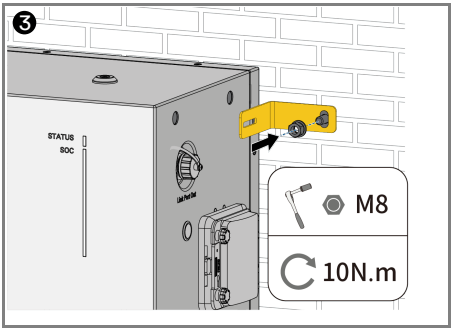
3
STATUS
SOC
M8
10N.m

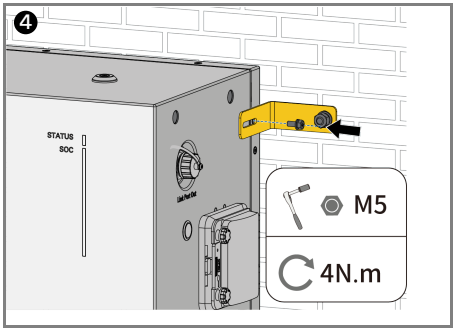
4
STATUS
SOC
M5
4N.m

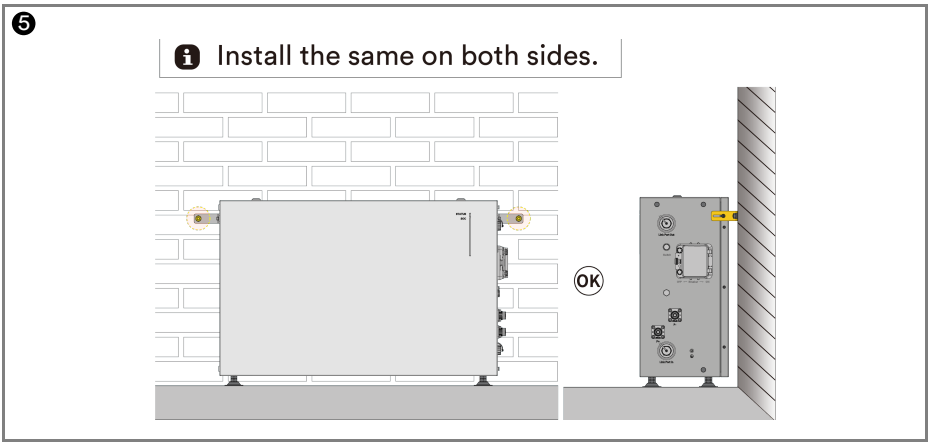
5
Install the same on both sides.
OK

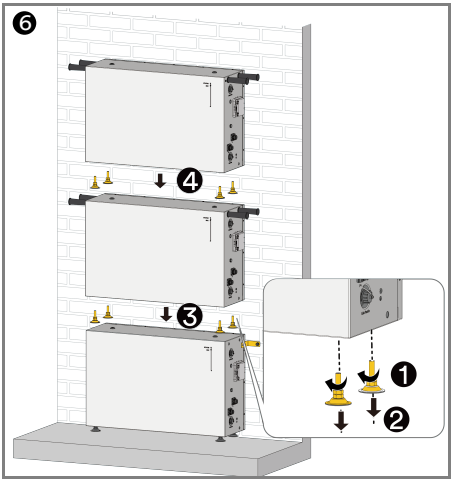
6
4
3
1
2

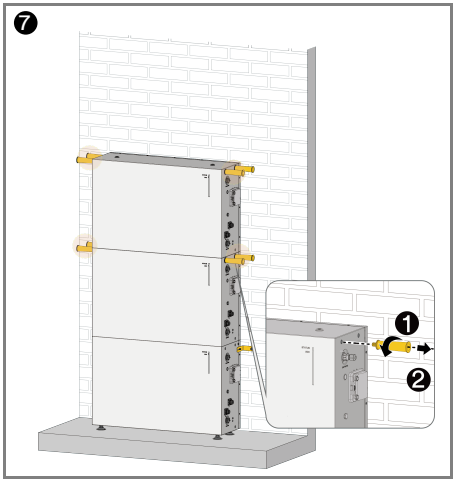
7
1
2

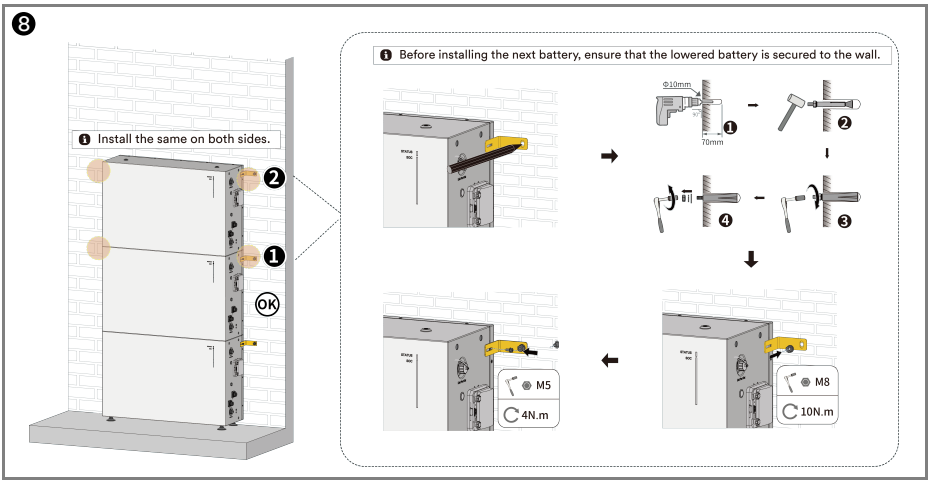
8
Install the same on both sides.
2
1
OK
Before installing the next battery, ensure that the lowered battery is secured to the wall.
Φ10mm
70mm
1
2
4
3
M5
4N.m
M8
10N.m

10 Secondary protective grounding

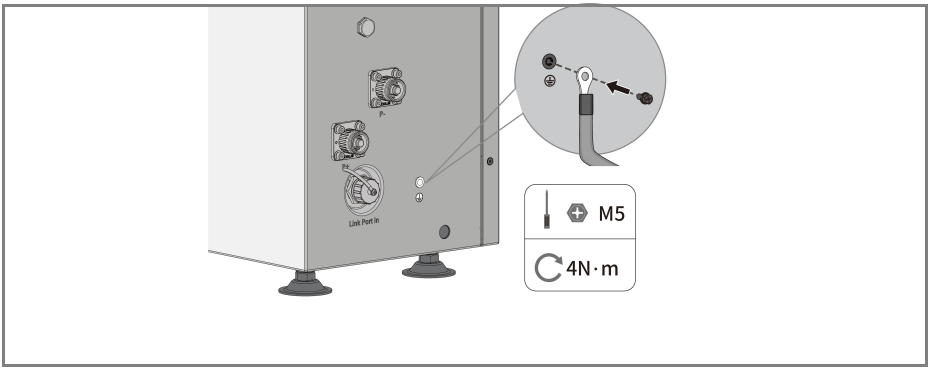

11 Electrical connection

11.1 Single system connection

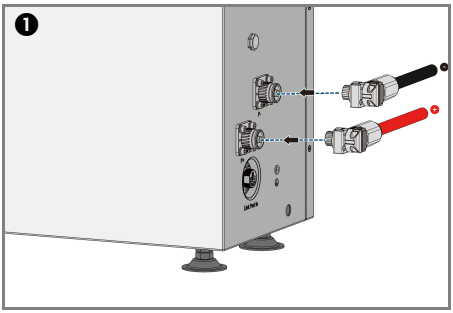

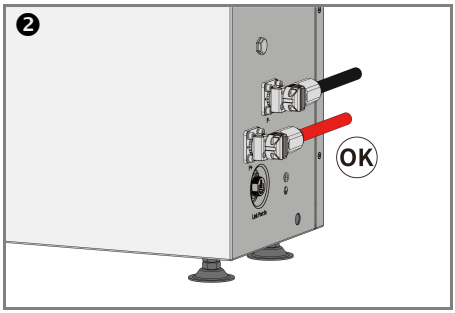

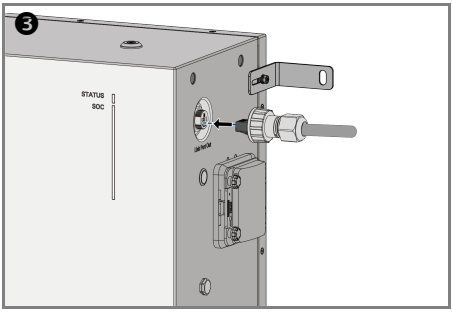

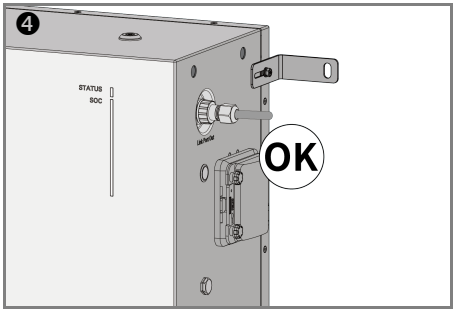

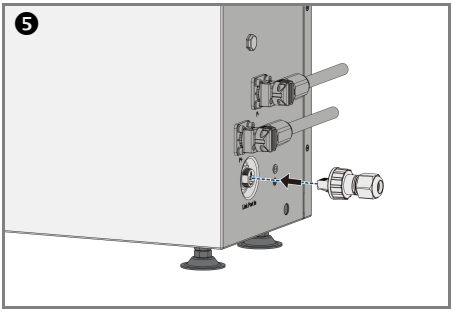
5

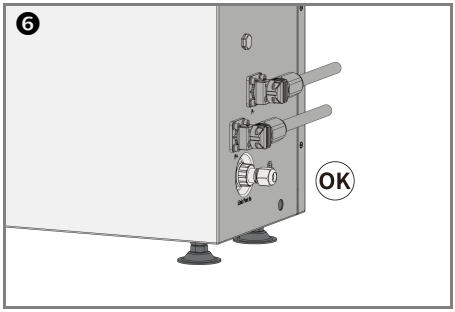
6
OK

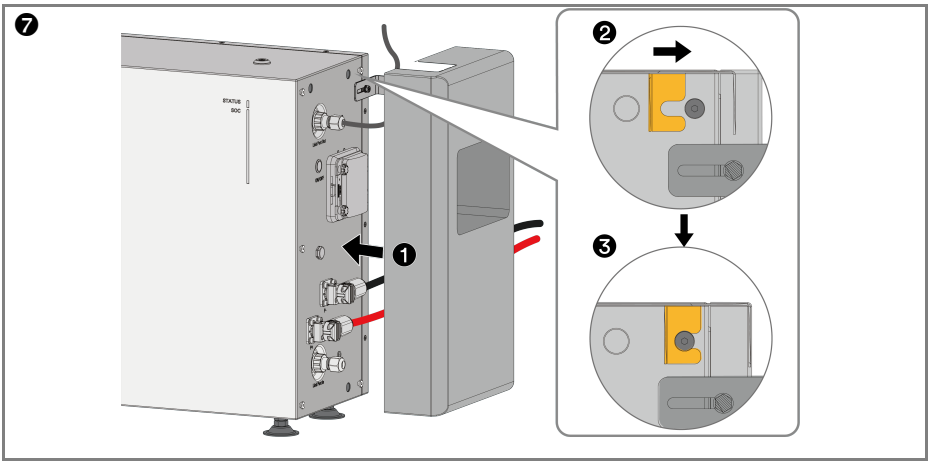
7
STATUS
SOC
1
2
3

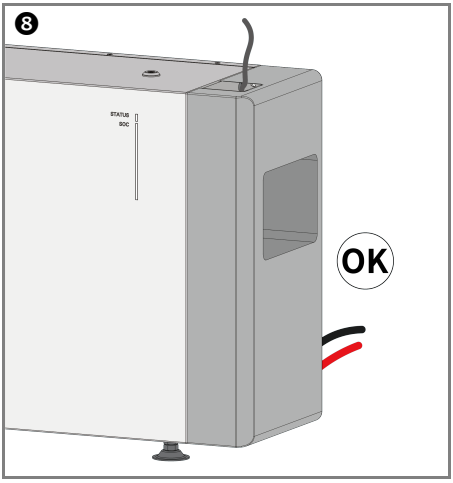
8
STATUS
SOC
OK

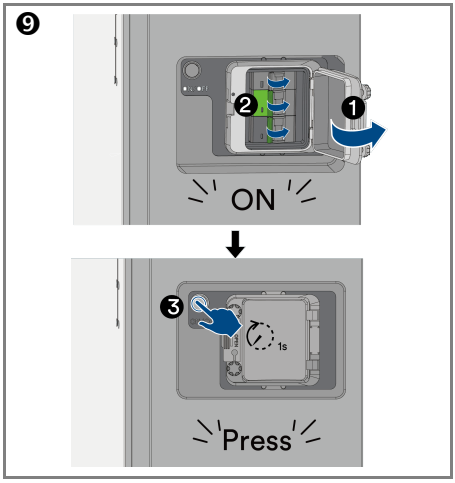
9
2
1
ON
3
1s
Press

11.2 Parallel system connection diagram

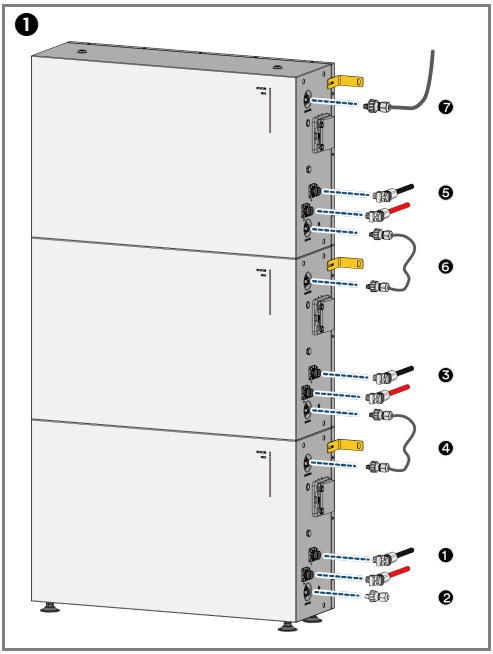

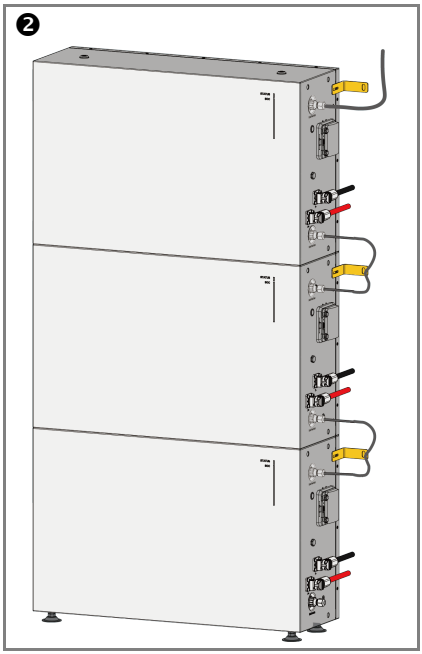

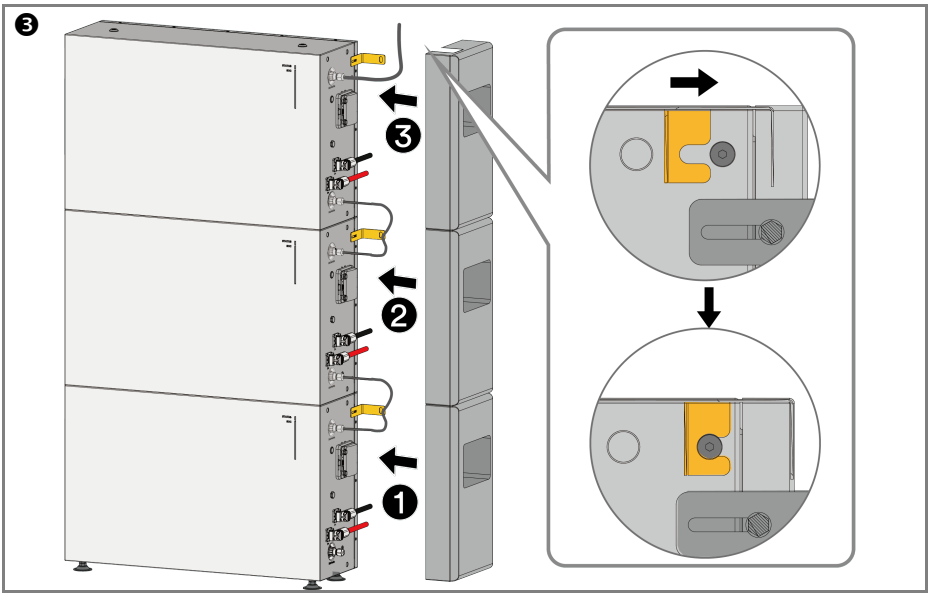

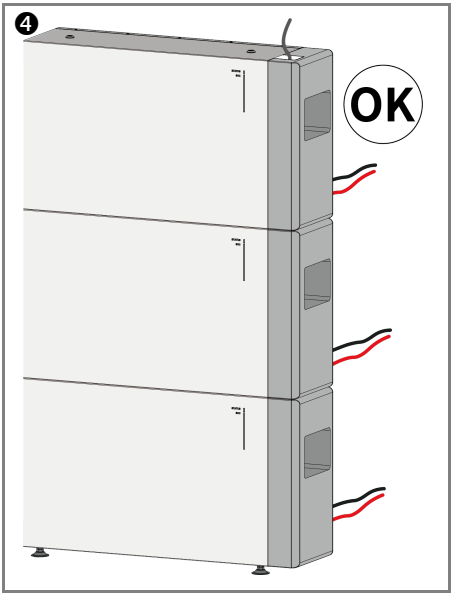
4
OK

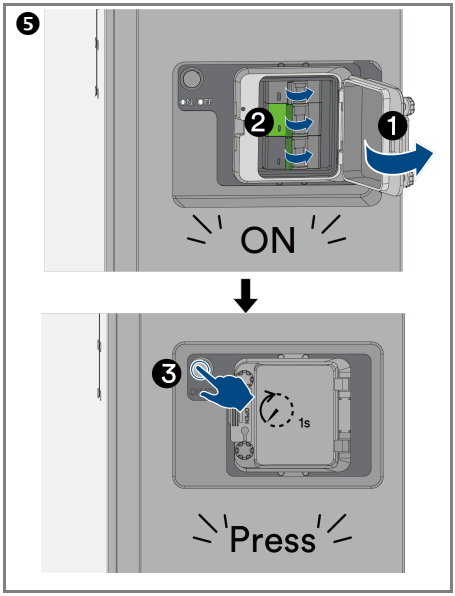
5
ON
OFF
1
2
ON
3
1s
Press

12 Contact

Please contact our Service Department if you have any technical questions about our products.

The following information is needed to provide necessary assistance:

——Battery model

——Battery series number

——Fault code

——Installation location

EMEA

Service email: service.EMEA@solplanet.net

APAC

Service email: service.APAC@solplanet.net

LATAM

Service email: service.LATAM@solplanet.net

Aiswei Greater China

Service email: service.china@aiswei-tech.com

Hotline: +86 400 801 9996

Taiwan

Service email: service.taiwan@aiswei-tech.com

Hotline: +886 809089212

https://solplanet.net/contact-us

Scan QR code:

Android

Scan QR code:

iOS

AISWEI New Energy Technology (Yangzhong) Co., Ltd.
Web: www.solplanet.net
Add.: No.588 Gangxing Road, Yangzhong, Economic
DevelopmentZone,Jiangsu, China-212200

PN: 540- 500732- 01