Solplanet

ASW45K-LT-G3/ASW50K-LT-G3/ASW60K-LT-G3

PV Grid-Connected Inverter User Manual

- Never install the inverter horizontally, or with a forward / backward tilt exceeding what is shown in the image below, or even upside down. The horizontal installation can result in damage to the inverter.

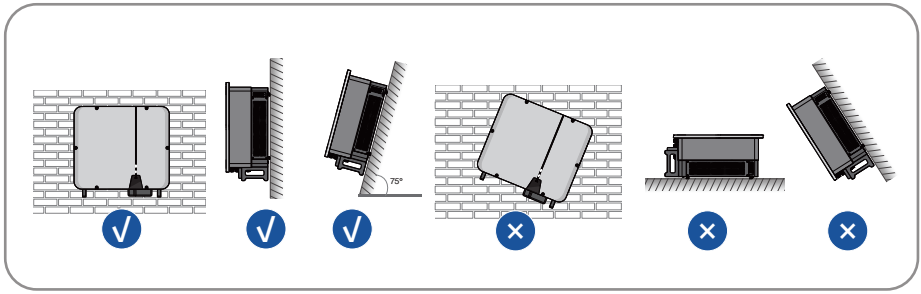

- Maintain the recommended clearances to other inverters or objects.

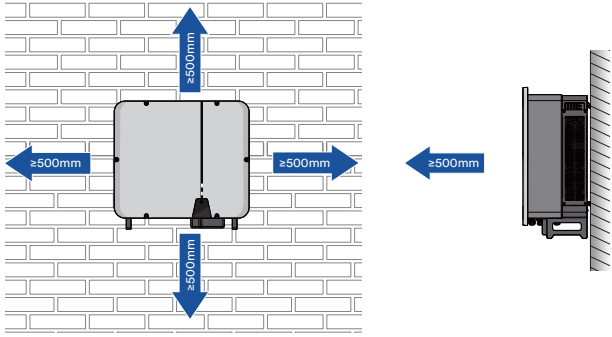

- In case of multiple inverters, ensure the appropriate clearance between the inverters.

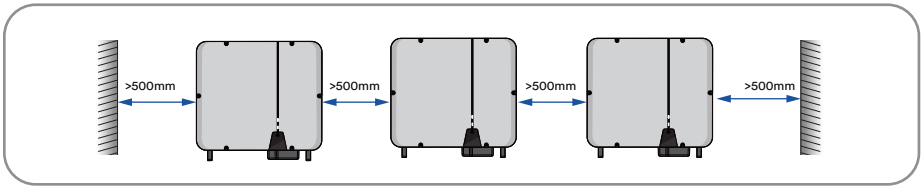

- The product should be mounted such that the LED indicators can be viewed without difficulty.
- The DC switch of the product must always be readily accessible.

5.2 Mounting

CAUTION

Risk of injury due to the weight of the product!

Injuries may result if the product is lifted incorrectly or dropped while being transported or mounted.

- Transport and lift the product carefully. Take the weight of the product into account.
- Wear suitable personal protective equipment for all work on the product.

CAUTION

Damage to cable lines can cause personal injury!

The walls may be covered with power cords or other lines (for example, gas or water).

- Make sure that no cables on the wall or inside the wall cavity are damaged when drilling.

Step 1: Align the wall mounting bracket horizontally on the wall with the arrows pointing upwards. Mark the position of the drill holes. Set the wall mounting bracket aside and drill the marked holes with a diameter of 12 mm. The depth of the holes should be about 70 mm. Maintain the hammer drill bit perpendicular to the wall to avoid drilling at an inclined angle.

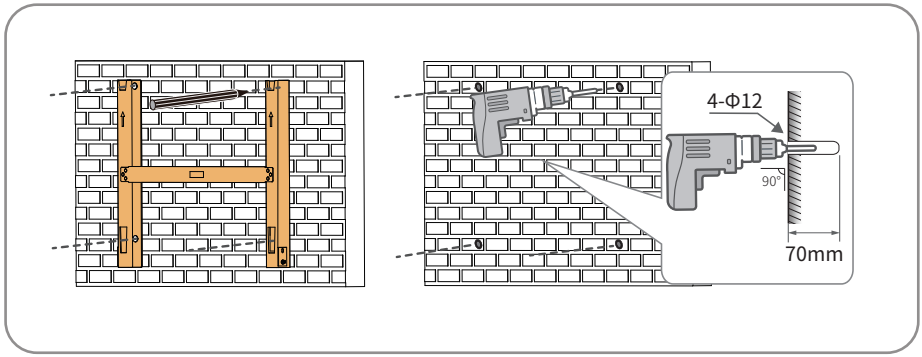

CAUTION

Danger of personal injury due to falling inverter.

If the hole depth and distance are not correct, the inverter may fall off the wall.

- Before inserting the bolts into the wall, measure the depth of the hole.

Step 2: Remove any dust from the hole, insert four expansion bolts into the hole, gently tap them into the hole with a rubber hammer, tighten the nuts with a wrench. Fix the bolt tail, and remove the nut, spring washer and flat washer and reserve them for the next step.

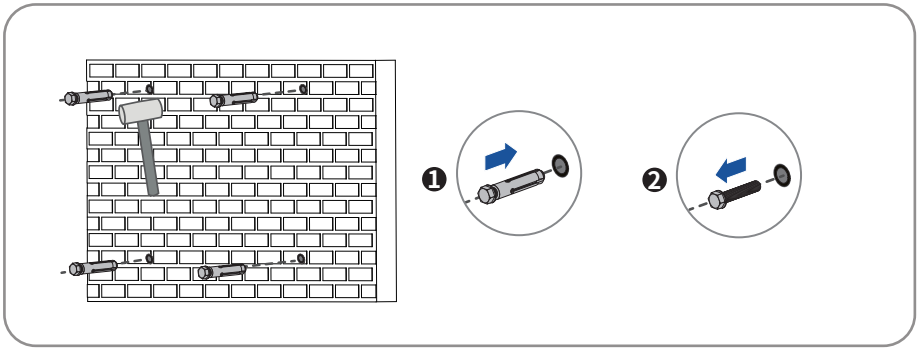

Step 3: Fix the mounting-bracket using the expansion bolts.

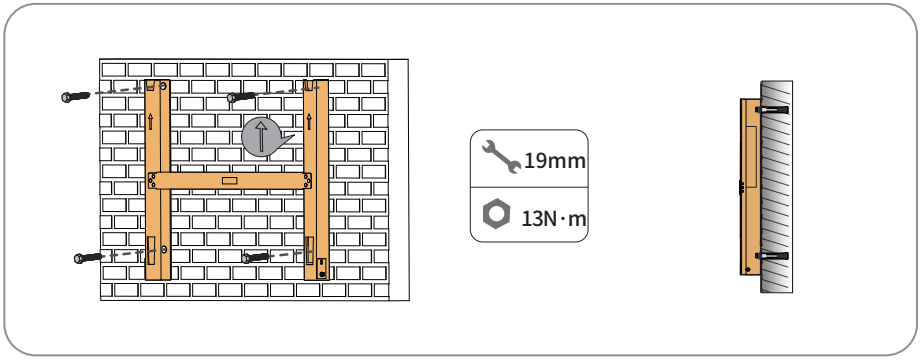

Step 4: Lift and place the inverter onto the mounting-bracket and ensure that the mounting flanges perfectly align with the mounting-bracket.

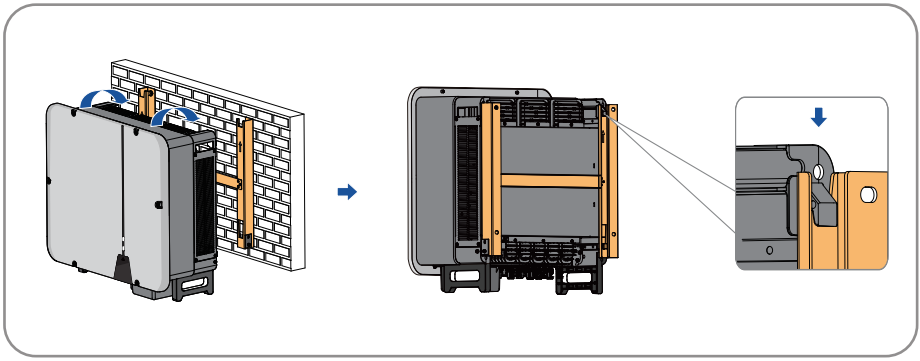

Ensure that the four fixing points fit securely in the groove.

Step 5: Secure the inverter to the mounting bracket with the screws provided.

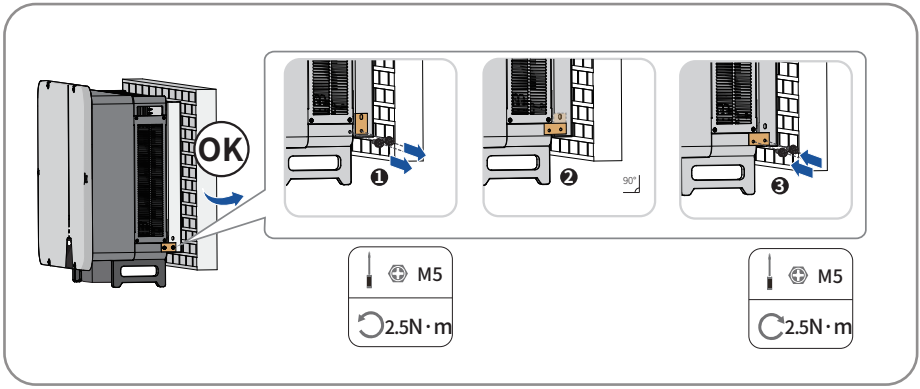

6 Electrical connection

6.1 Overview of the connection area

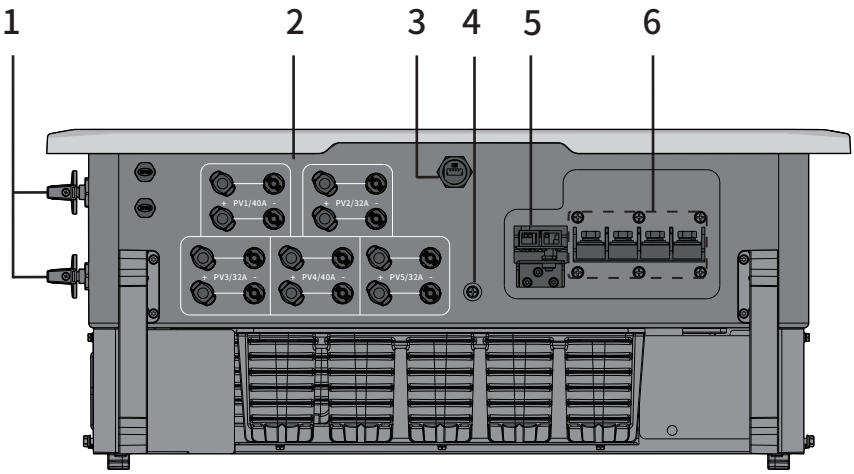

The figure shown here is for reference only. The actual product received may slightly differ!

No.	Name
1	DC-switch
2	DC input connectors
3	Wi-Fi stick port
4	Additional grounding terminal
5	RS485 communication port
6	AC terminal

6.2 Connecting additional grounding

The inverter is equipped with a grounding fault monitoring device. The grounding fault monitoring device will disconnect the inverter from utility grid when it detects there is no ground conductor connected. Hence the product does not require additional grounding or equipotential bonding when operating.

If the ground fault monitoring function is deactivated or the additional grounding is required by local installation standards, then additional grounding can be connected to the inverter.

Requirements for secondary protection ground cable:

Item	Description	Note
1	Screw	Specifications M5, supplied.
2	OT/DT terminal	Specifications M5, provided by the customer.
3	Yellow and green ground cable	16-35mm²

Procedure:

Step 1: Strip the grounding cable insulation. Insert the stripped part of the ground cable into the ring terminal and crimp using a crimping tool. Insert the stripped part of the grounding cable into the ring terminal and crimp using a crimping tool.

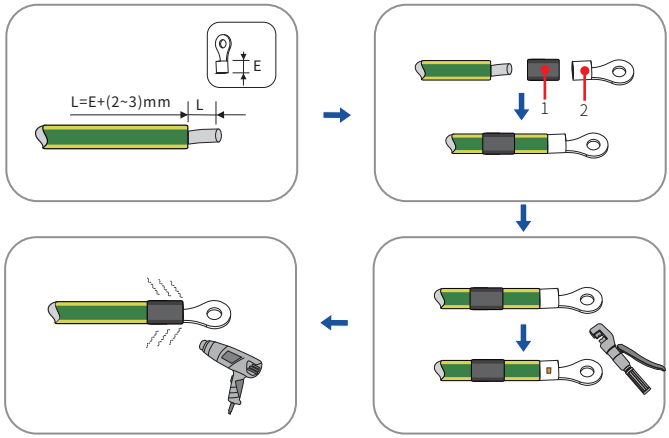

1: Heat shrink tubing 2: OT/DT terminal (M5)

Step 2: Remove the screw on the ground terminal, insert the screw through the OT/DT terminal, and tighten the screw.

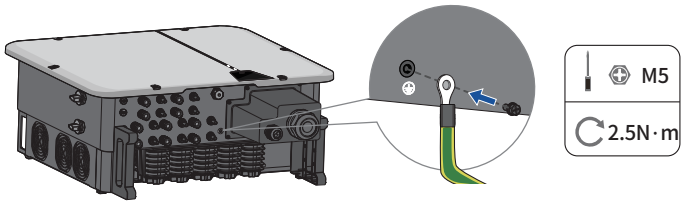

Step 3: Apply paint to the grounding terminal to ensure corrosion resistance.

6.3 AC connection

6.3.1 Requirements for the AC connection

Cable Requirements

The cable must be dimensioned in accordance with the local and national standards or for the dimensioning of cables. The requirements for the minimum wire are derived derive from these directives. Examples of factors influencing cable dimensioning are: nominal AC current, type of cable, routing method, cable bundling, ambient temperature and maximum desired line losses.

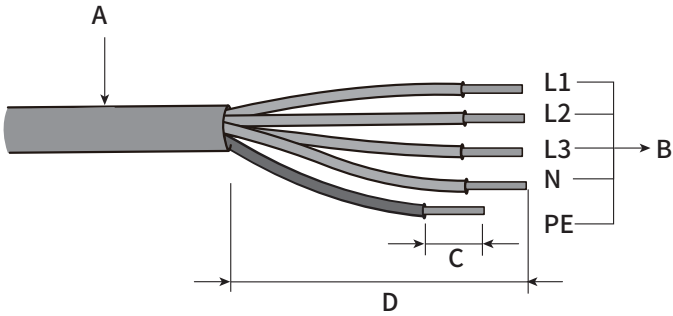

Item	Description	Value
A	External diameter of outer sheath	28…42mm
B	L1-L3 Copper cable conductor cross-section	30…70mm²
	N Copper cable conductor cross-section	S/2…70mm²
	PE Copper cable conductor cross-section	S/2…35mm²
C	Insulation stripping length	Matching terminal
D	Sheath stripping length	130 mm

*Cross-sectional area of conductor conductors=S

Requirements for M8 OT/DT Terminal

OT/DT terminals (not included in the delivery scope) are required for connecting AC cables to the terminal block. Purchase the OT/DT terminals according to the following requirements.

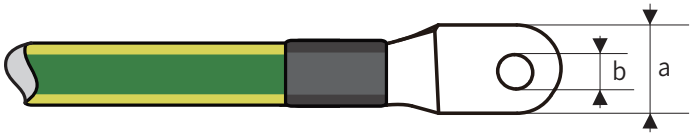

Item	Description
A	a≤23mm
B	8.5mm≤b≤10.5mm

Aluminium Cable Requirements

If an aluminium cable is selected, use a copper to aluminium adapter terminal to avoid direct contact between the copper bar and the aluminium cable.

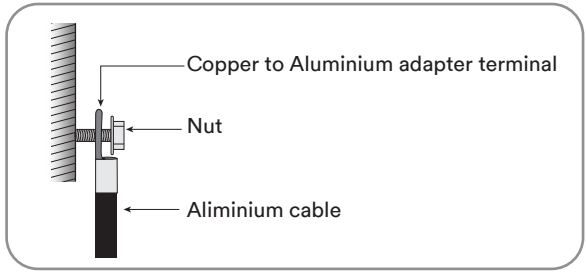

Ensure that the selected adapter terminal makes direct contact with the copper bar. If there are any problems, contact the manufacturer of terminal.
Direct contact between the copper bar and the aluminium cable will cause electrochemical corrosion and impair the reliability of electrical connection.

Residual current protection

The product is equipped with an integrated universal current-sensitive residual current monitoring unit inside. Hence the product does not require an external residual-current device when operating.

If local regulations require the use of a residual-current device, please install a type A residual-current protection device with a protection limit of no less than 300mA.

Overvoltage category

The inverter can be used in grids of overvoltage category III or lower in accordance with IEC 60664-1. That means that the product can be permanently connected to the grid-connection point of a building. In case of installations with long outdoor cable routes, additional measures to reduce overvoltage category IV to overvoltage category III are required.

AC circuit breaker

In PV systems with multiple inverters, a seperate AC circuit breaker is required for each inverter. This will prevent voltage from being present at the corresponding connection point after disconnection.

No consumer load should be connected between AC circuit breaker and the inverter.

The selection of the AC circuit breaker rating depends on the wiring design (wire cross-section area), cable type, wiring method, ambient temperature, inverter current rating, etc. Derating of

the AC circuit breaker rating may result due to self-heating or if exposed to heat.

The maximum output current and the maximum output overcurrent protection of the inverters can be found in section 10 “Technical data”.

Ground fault monitoring

The inverter is equipped with a ground fault monitoring device. This device will disconnect the inverter from utility grid when it detects there is no ground fault connected. Depending on the installation site and grid configuration, it may be advisable to deactivate the ground fault monitoring. This is necessary, for example, in an IT electrical system if there is no neutral conductor present and you intend to install the inverter between two line conductors. If you are uncertain about this, contact your grid operator or Solplanet.

Safety in accordance with IEC 62109 when the ground fault monitoring is deactivated.

In order to guarantee safety in accordance with IEC 62109 when ground fault monitoring is deactivated, carry out the following measure:

- Connect an additional grounding that has at least the same cross-section as the connected grounding conductor to the AC cable. This prevents touch current in the event of the grounding conductor on a damaged AC cable failing.

6.3.2 AC cable connection

WARNING

Risk of injury due to electric shock by high leakage current.

If the ground wire is disconnected , touching the product may result in death or lethal injuries due to high leakage current.

- The product must be grounded correctly in order to protect property and personal safety.

Procedure:

Step 1: Switch off the AC circuit breaker and lock it to avoid it from being inadvertently switched on.

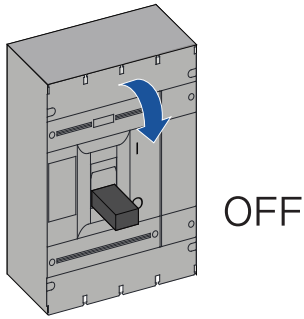

Step 2: Remove the AC/COM cover from the inverter, set aside the removed screws for Step 6.

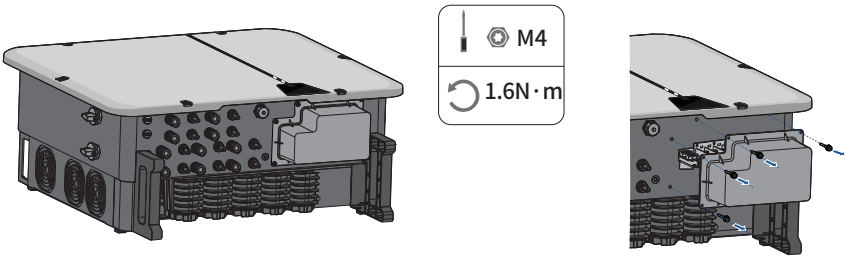

Step 3: Remove nut, take out the sealing ring, take out the plug, select the appropriate sealing ring according to the wire diameter, pass the cable through the waterproof connector on the AC/COM cover.

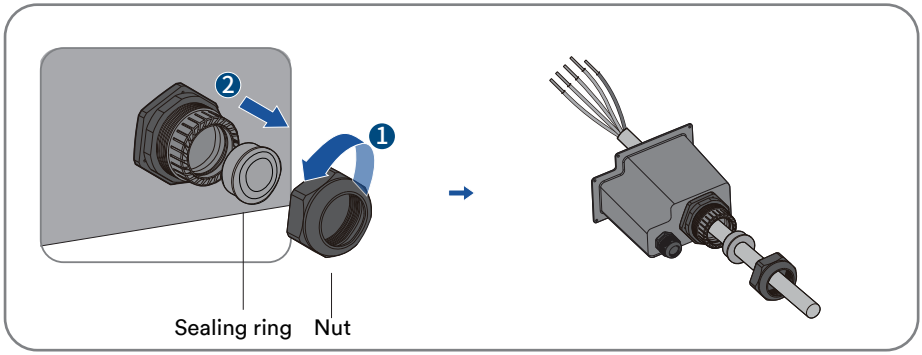

Step 4: Assemble the cable and crimp the OT/DT terminal.

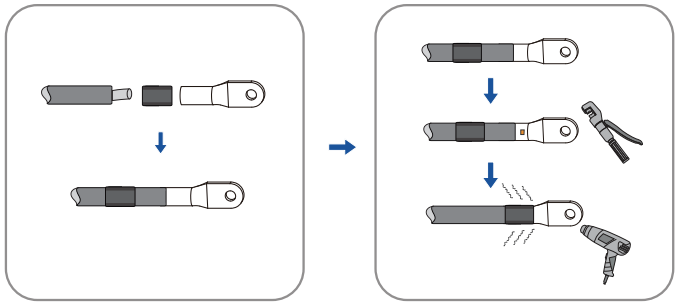

Step 5: Connect the wires to the corresponding terminals, use heat shrink to cover exposed metal of the AC cable.

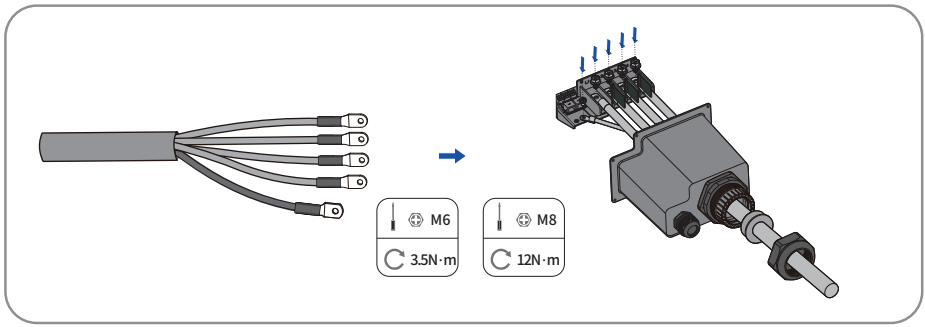

NOTICE

Damage to the inverter due to incorrect wiring.

If the phase line is connected to PE terminal, the inverter will not function properly.

- Please ensure the AC cables are connected to the correct terminals on the terminal block.

Step 6: Attach the AC/COM cover and tighten the nut.

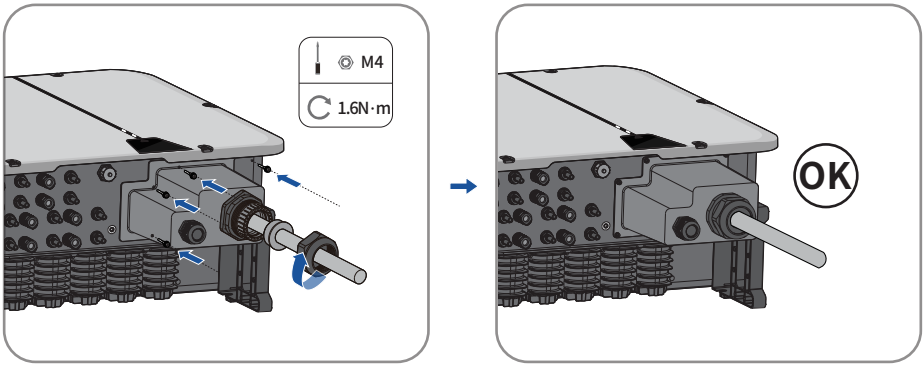

6.4 DC connection

6.4.1 Requirements for the DC connection

Requirements for the connection of PV modules per MPPT input

- All PV modules should be of the same type.
- All PV modules should be aligned and tilted identically.
- On the coldest day based on statistical records, the open-circuit voltage of the PV array must never exceed the maximum input voltage of the inverter.
- The same number of series-connected PV modules must be connected to each string.
- The maximum input current per string must not be exceeded and must stay within the DC rating of the DC connectors.
- The DC cables to the inverter must be used with the connectors included in the scope of delivery.
- The thresholds for the input voltage and the input current of the inverter must be adhered to.
- The positive DC cables of the PV modules must be used with the positive DC connectors. The negative DC cables of the PV modules must be used with the negative DC connectors.

6.4.2 Assembling the DC connectors

DANGER

Danger to life due to electric shock when live components or exposed DC cables are touched!

When exposed to light, the PV modules generate high DC voltage which is present in the DC cables. Touching exposed live DC cables may result in death or lethal injuries due to electric shock.

- Do not touch non-insulated parts or cables.
- Disconnect the product from voltage sources and ensure it cannot be reconnected before working on the device.

For connection to the inverter, all PV module cables must be fitted with the DC connectors provided. There may be two different type of DC connector shipped. Assemble the DC connectors as described in the following section.

Type 1 DC connector “Phoenix Contact Sunclix”

Assemble the DC connectors as described below. Be sure to observe the correct polarity. The DC connectors are marked with the symbols “+” and “ – ”.

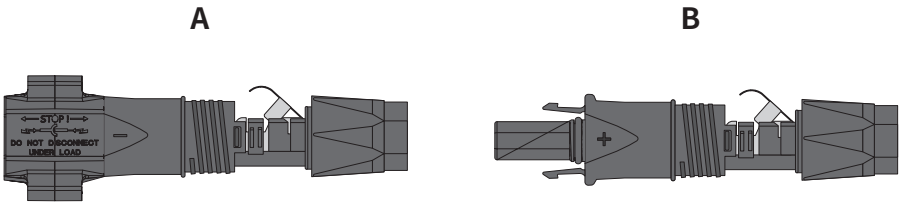

Cable requirements:

Item	Description	Value
1	Cable type	PV cable
2	External diameter	5-8 mm
3	Conductor cross-section	2.5-6 mm²
4	Number of copper strands	At least 7
5	The rated voltage	≥1100 V

Procedure:

Step 1: Strip 12 mm off the cable insulation.

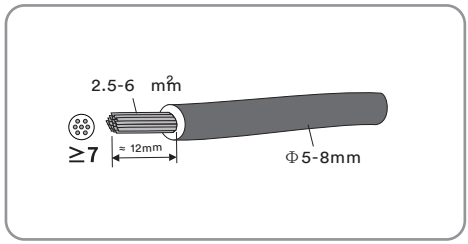

Step 2: Insert the stripped section into the DC connector. Push the clamping bracket down until it audibly snaps into place.

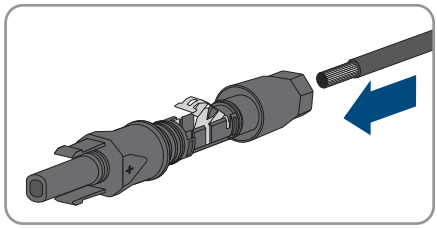

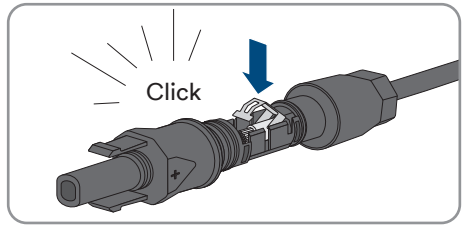

If the wire strands are not visible in the chamber, the cable is not correctly nserted and the connector must be reassembled. To do this, the cable must be removed from the connector.

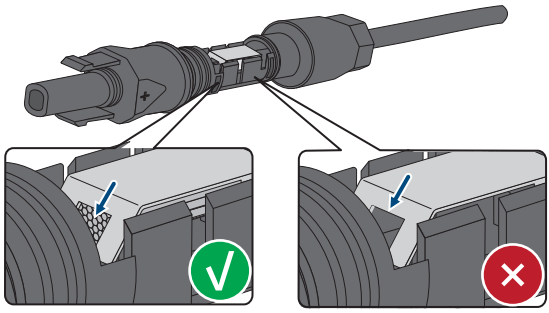

Release the clamping bracket by inserting a screwdriver (blade width: 3.5 mm) into the clamping bracket and pry the clamping bracket open.

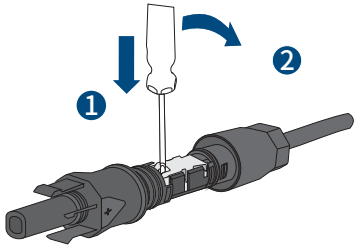

Remove the cable and return to Step 2.

Step 3: Push the nut up to the thread and tighten the nut.(SW15, Torque: 2.0Nm).

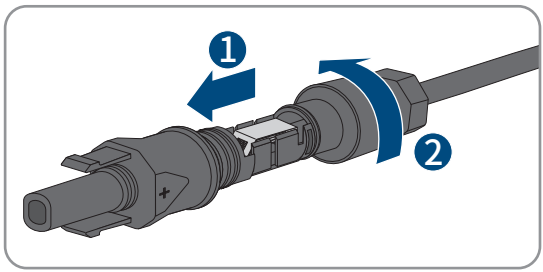

Type 2 DC connector:

Assemble the DC connectors as described in the following section.

Assemble the DC connectors as described below. Be sure to observe the correct polarity.

The DC connectors are marked with the symbols “+” and “ – ”.

A

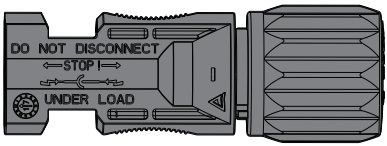

B

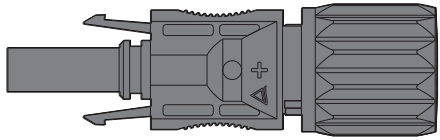

Cable requirements:

Item	Description	Value
1	Cable type	PV1-F，UL-ZKLA or USE2
2	External diameter	5-8 mm
3	Conductor cross-section	2.5-6 mm²
4	Number of copper strands	At least 7
5	The rated voltage	≥1100 V

Proceed as follows to assemble each DC connector.

Step 1: Strip 12 mm off the cable insulation.

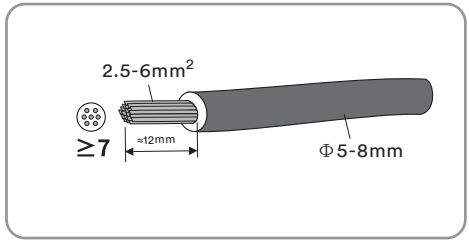

Step 2: Assemble the cable ends with the appropriate crimping tool.

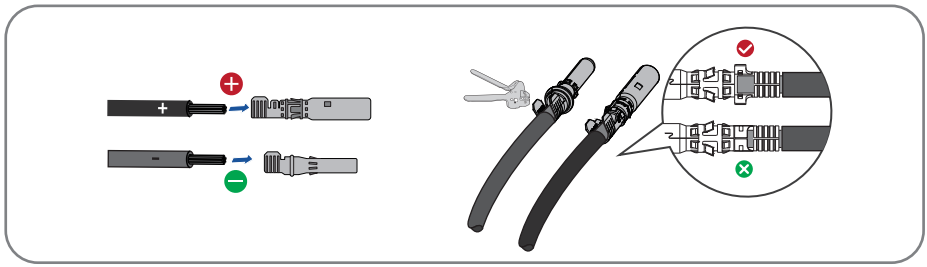

Step 3: Insert the cable through cable gland, and insert into the housing until it snaps into place. Gently pull the cable backward to ensure firm connection. Tighten the cable gland and onto the housing (Torque 2.5-3Nm).

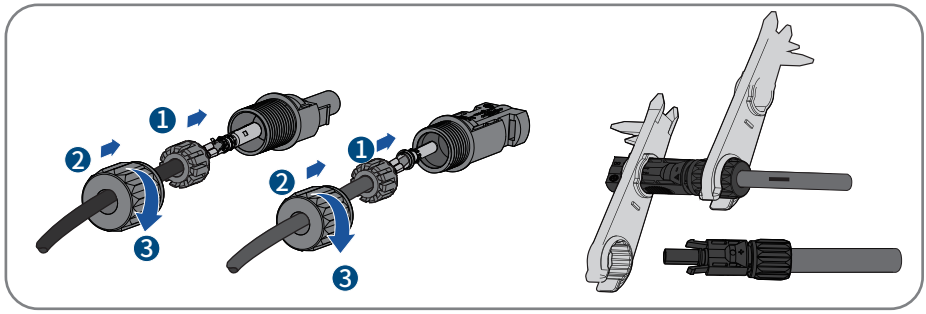

Step 4: Ensure that the cable is correctly positioned.

6.4.3 Connecting the PV array

DANGER

Danger to life due to high voltages in the inverter!

When exposed to light, the PV modules generate high DC voltage which is present in the DC cables. Touching live DC cables may result in death or lethal injuries due to electric shock.

- Before connecting the PV array, ensure that the DC switch is switched off and that it cannot be turned on.
- Do not disconnect the DC connectors under load.

NOTICE

The inverter can be destroyed by overvoltage.

If the voltage of the strings exceeds the maximum DC input voltage of the inverter, it can be destroyed due to overvoltage. All warranty claims become void.

- Do not connect strings with an open-circuit voltage greater than the maximum DC input voltage of the inverter.
- Check the design of the PV system.

Step 1: Ensure that the inverter AC circuit breaker is switched off and ensure that it cannot be accidentally turned on.

Step 2: Ensure that the DC switch is switched off and ensure that it cannot be accidentally turned on.

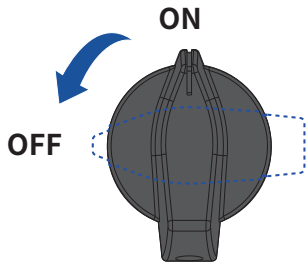

Step 3: Ensure that there is no ground fault in the PV array.

Step 4: Check whether the DC connector has the correct polarity. If the DC connector is equipped with a DC cable having the wrong polarity, the DC connector must be reassembled. The DC cable must always have the same polarity as the DC connector.

Step 5: Ensure that the open-circuit voltage of the PV array does not exceed the maximum DC input voltage of the inverter. Connect the assembled DC connectors to the inverter until they audibly snap into place.

Type 1 DC connector "Phoenix Contact Sunclix":

- Connect the assembled DC connectors to the inverter.

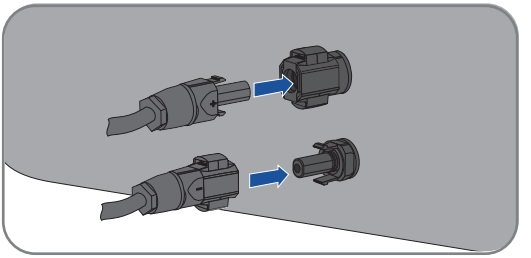

- For unused DC connectors, push down the clamping bracket and push the swivel nut up to the thread. Insert the DC connectors with sealing plugs into the corresponding DC inputs on the inverter.

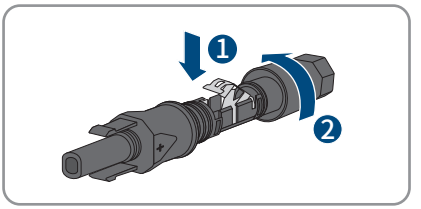

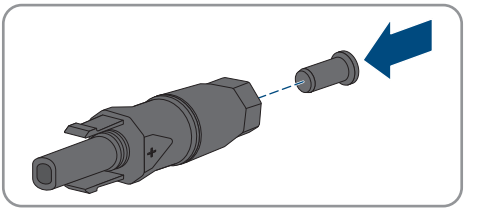

- Insert the DC connectors with sealing plugs into the corresponding DC inputs on the inverter.

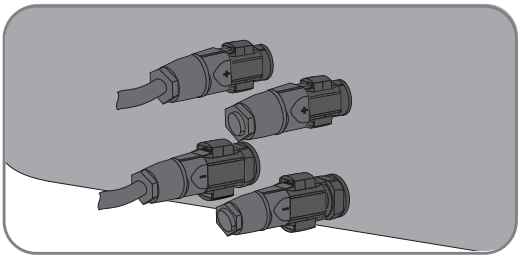

Type 2 DC connector:

- Connect the assembled DC connectors to the inverter.

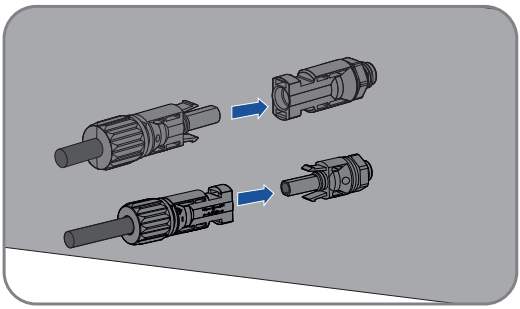

- Do not pull out the protective caps from unused DC input connectors.

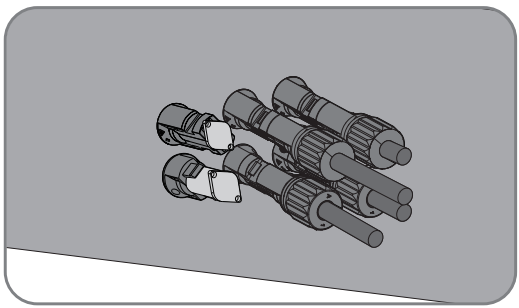

Check the positive and negative polarity of the PV strings, and connect the PV connectors to corresponding terminals only after ensuring polarity correctness.(The image below uses the type 2 connector as an example only.)

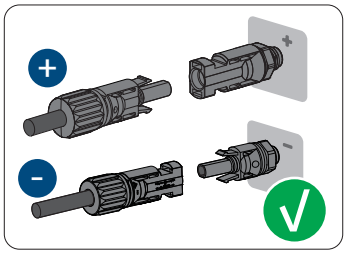

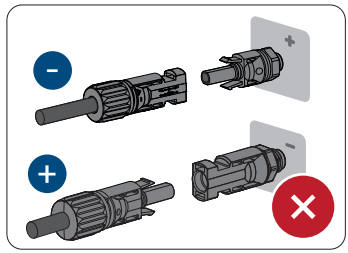

Step 7: Ensure that all DC connectors and the DC connectors with sealing plugs are securely in place.

6.5 RS485 cable connection

NOTICE

Damage to the inverter due to electrostatic discharge.

Internal components of the inverter can be irreparably damaged by electrostatic discharge

- Ground yourself before touching any component.

6.5.1 Connection Procedure

Step 1: Take out the relevant accessory from the package.

Step 2: Remove the AC/COM cover from the inverter, set aside the removed screws for Step 6.

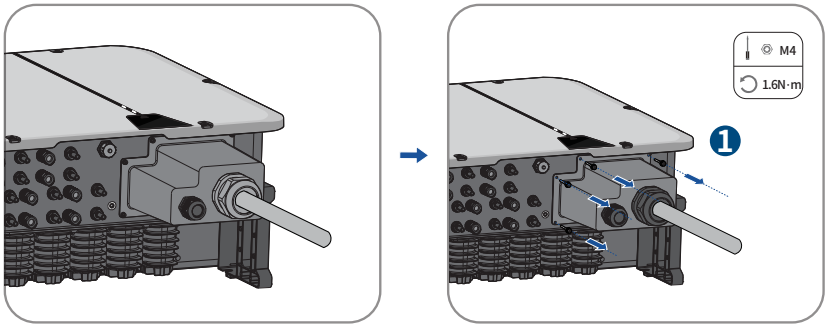

Step 3: Remove the nut remove the sealing ring, remove the plug.

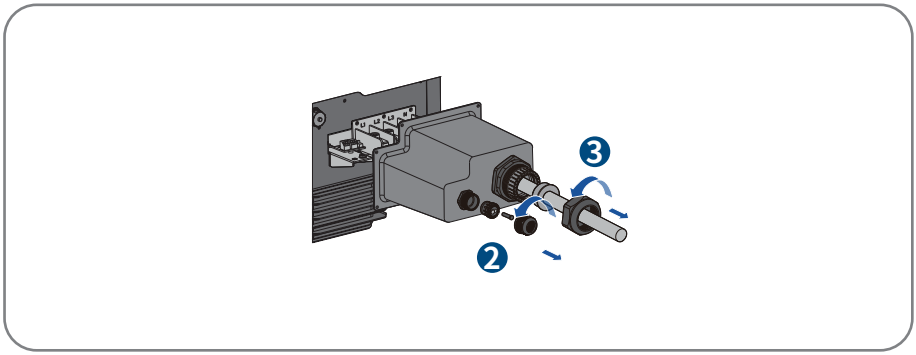

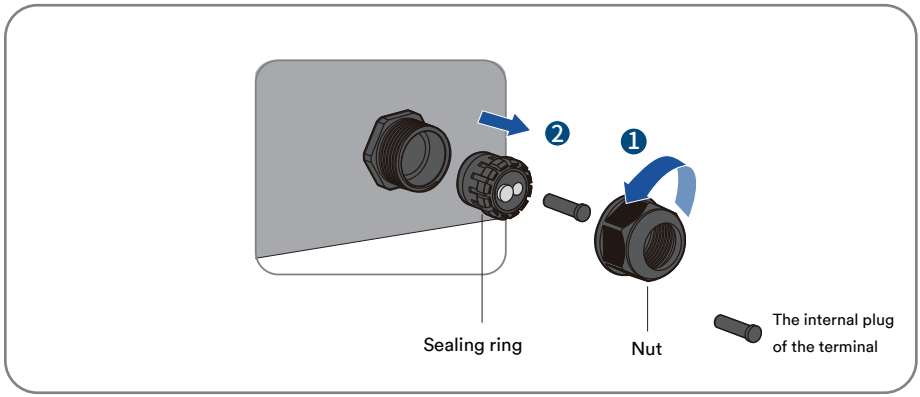

Step 4: Strip the protection layer and insulation layer of the communication cable by the required, as described in the figure below.

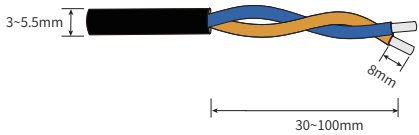

Step 5: Pass the cable through the gland on the AC/COM cover, and then guide the cable insert into the corresponding terminal.

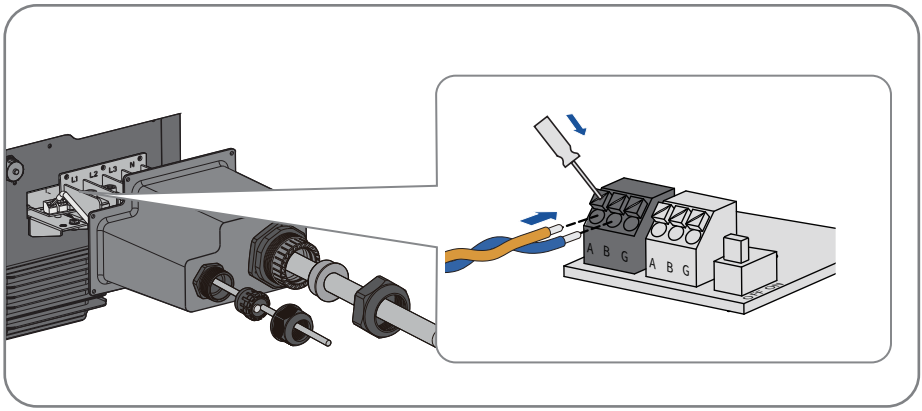

Step 6: Secure the AC/COM cover with screws, and finally tighten the gland.

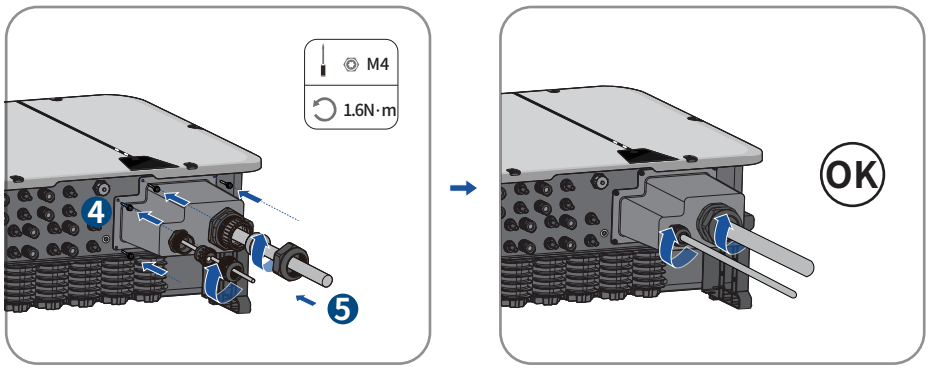

Step 7: End.

6.5.2 Multi-inverter connection

In case of multiple inverters, all the inverters can be connected via RS485 cables in a daisy chain configuration.

The inverter has an impedance matching function of the 485 communication bus. If the communication bus needs to match the impedance, turn the DIP switch to the ON position. If the communication bus does not need to match the impedance, turn the DIP switch to the OFF position.

If multiple inverters are connected in a daisy chain communication configuration, the the DIP switch settings are as follows:

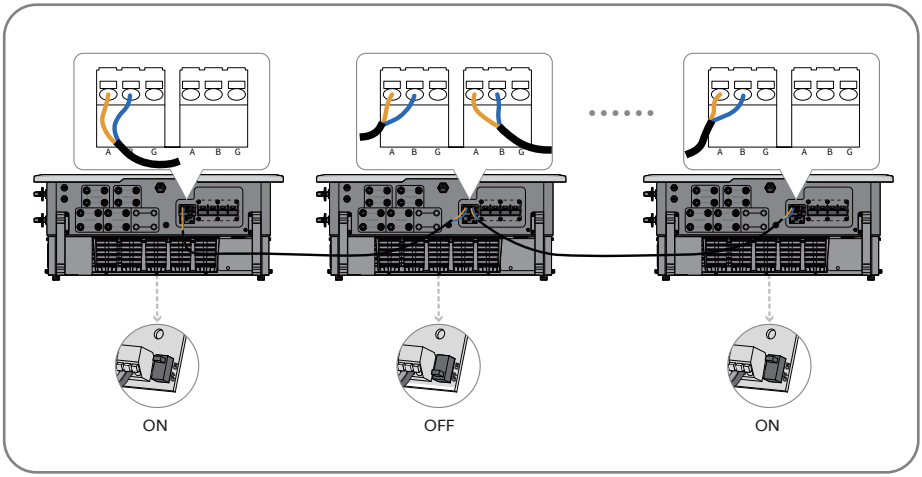

It is recommended to choose 3-core twisted wire to improve the anti-interference ability of RS485 communication. The ground wire of the 3-core twisted wire can be connected to terminal G.

6.6 Wi-Fi stick connection

Step 1: Use the Wi-Fi stick included in the scope of delivery.

Step 2: Remove the dust and waterproof cover of the Wi-Fi stick on the inverter and retain it.

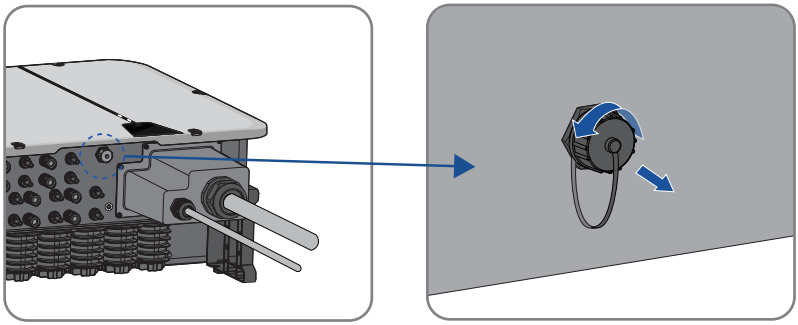

Step 3: Attach the Wi-Fi stick to the connection port in place and tighten it by hand with the nut on the Wi-Fi stick. Make sure the Wi-Fi stick is securely connected and the label on the Wi-Fi stick can be easily seen to allow for the scanning of the QR code during commissioning.

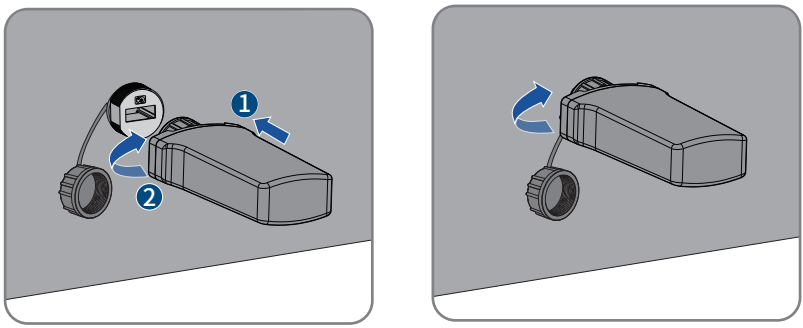

NOTICE

Rotating the Wi-Fi stick will damage the Wi-Fi stick!

The Wi-Fi stick is protected by locking nuts to protect the reliability of the connection. If the body of the Wi-Fi stick is rotated after the Wi-Fi stick has been installed, it may become damaged.

It can only be secured by the nut.

- Do not rotate the Wi-Fi stick housing body.

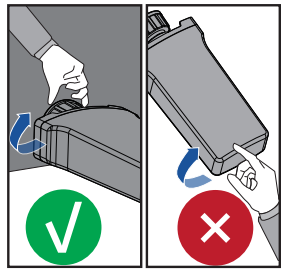

7 Commissioning

7.1 Inspection before commissioning

CAUTION

Danger to life due to high voltages on DC conductors!

When exposed to sunlight, the PV array generates dangerous DC voltage which is present in the DC conductors. Touching the DC and AC conductors can lead to lethal electric shocks.

- Only touch the insulation of the DC cables.
- Only touch the insulation of the AC cables.
- Do not touch ungrounded PV modules and brackets.
- Wear personal protective equipment, such as insulating gloves.

Check the following items before starting the inverter:

- Ensure the inverter DC switch inverter AC circuit breaker are OFF.
- Ensure the inverter has been correctly mounted onto the mounting bracket.
- Ensure there are no objects lying on top of the inverter.
- Ensure the communication cable and AC connector have been correctly wired and tightened.
- Ensure the inverter's exposed metal surface has a ground connection.
- Ensure the DC voltage of the strings does not exceed the permitted limits of the inverter.
- Ensure the DC voltage has the correct polarity.
- Ensure that the insulation resistance to ground is greater than the insulation resistance protection value.
- Ensure the grid voltage at the point of connection of the inverter complies with the permitted value of the inverter.
- Ensure the AC circuit breaker complies with this manual and all applicable local standards.

7.2 Commissioning procedure

If all of the items mentioned above meet the requirements, proceed as follows to start up the inverter for the first time.

1. Turn the DC switch of the inverter to the “ON” position.
2. Set initial protection parameters via the Solplanet App. For details, please refer to “8.4 Create a plant”.
3. Switch on the AC circuit breaker. If the irradiation and grid conditions meet the minimum thresholds, the inverter will operate normally.
4. Observe the LED indicator to ensure that the inverter operates normally.

8 Solplanet app

8.1 Brief introduction

The Solplanet App can establish communication connection to the inverter via WLAN, there by allowing local maintenance on the inverter. Users can view inverter information and set parameters through the App.

8.2 Download and install

Scan the following QR code to download and install the App.

Android iOS

8.3 Create an account

If you do not have an account, register a new account first.

Procedure:

Step 1: Open Solplanet App to enter the login screen, and tap “Don’t have an account” to enter the next screen.

Step 2: The user groups “Business users” and “End user” need to be selected according to your identity, and tap “Next step”.

The end user and the business user have the different permissions for setting parameters. The end user only can set the parameters only once during commissioning. Business users have more permissions, submmission of identity authentication documents are required.

Step 3: Enter a mobile phone number (Via SMS) or E-mail address (Via mail). And tap the "Send verification code".

Step 4: Enter the correct verification code to automatically enter the next page.

Step 5: Set the password and click "Register" to complete the registration.

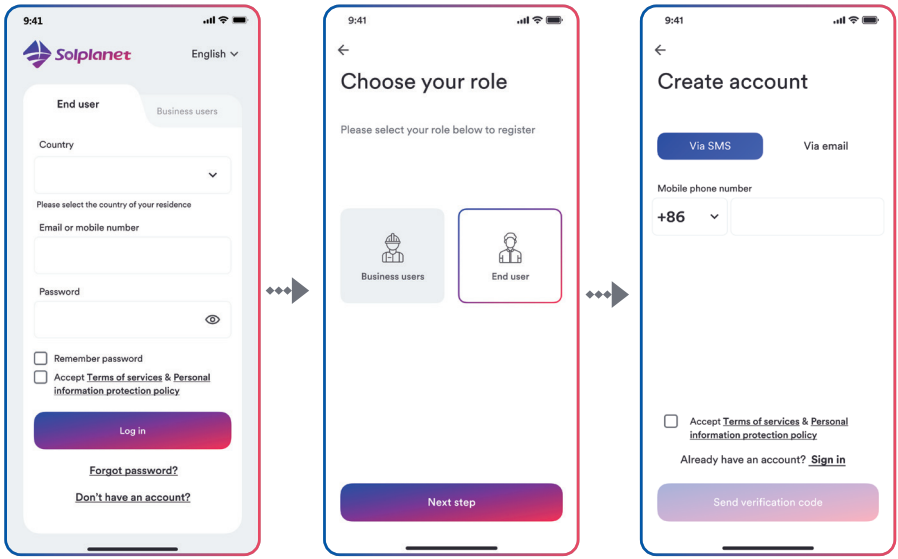

Step 1 Step 2 Step 3

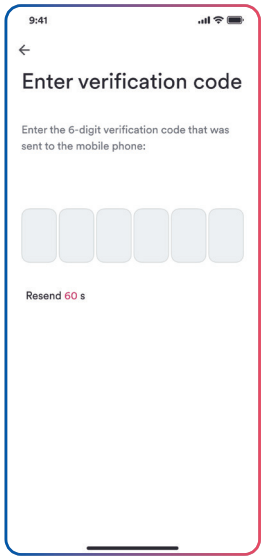

Step 4

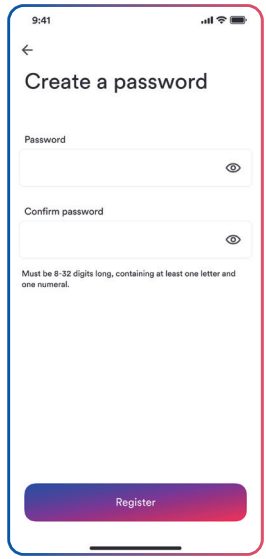

Step 5

8.4 Create a plant

Procedure:

Step 1: Open Solplanet App to enter the login screen, enter the account name and password, and tap “Log in” to enter the next screen.

Step 2: Tap the symbol “+” to enter the next screen, and tap “Create or Modify Plant”, then the camera of the smart device automatically turns on, and scan the QR code of the Wi-Fi stick to enter the next screen, tap “Create new plant” to the next screen.

Step 3: Enter the PV plant information in all fields marked with a red asterix, and tap “Create” to enter the next screen.

Step 4: After the planet is created, tap “Add dongle to the plant” , and tap “Add to plant” to the next screen.

Step 5: Tap “Connect to dongle access point” , the smart device will connect to Wi-Fi stick hotsport automatically. The inverter list can be found after the connection successful. Please note that the green LED on the Wi-Fi stick should be Solid ON and the blue LED should be OFF. This LED status indicates that the Wi-Fi stick is not connected or has not been previously connected to a router.

Step 6: Tap the inverter serial number that matches your inverter to set the parameters. The detail description can be found at section 8.5.

The grid code should be chosen at this step. The standard parameters can be adjusted if the grid company has the different requirements.

Step 7: After the parameter configuration, tap the left arrow to go back the inverter list page. Then tap “Next step” to enter the next page.

Step 8: The parameter of the “Export Power Control” can be set, and tap “Save” after the parameter configuration. Then tap “Next step” to enter the next page.

If “Export Power Control” is not required, tap “Next step” to skip this step.

Step 9: Tap “Continue”, and choose Wi-Fi network from the list, and enter Wi-Fi network password. Then tap “Continue” to enter the next step.

Step 10: Observe whether the Led blue light of the dongle turns to solid ON. If it is solid ON, it means that the network configuration is successful, and you can tap “complete” to complete the configuration. Otherwise, go back to the previous step and reenter the Wi-Fi password.

Step 11: Now the new plant has been created. Tap the plant to review the information of the plant.

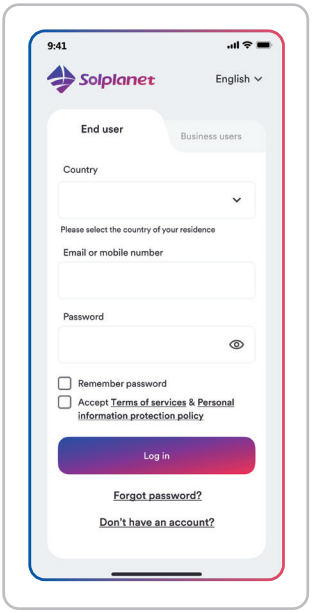
9:41
Solplanet
English
End user
Business users
Country
Please select the country of your residence
Email or mobile number
Password
Remember password
Accept Terms of services & Personal information protection policy
Log in
Forgot password?
Don't have an account?

Step 1

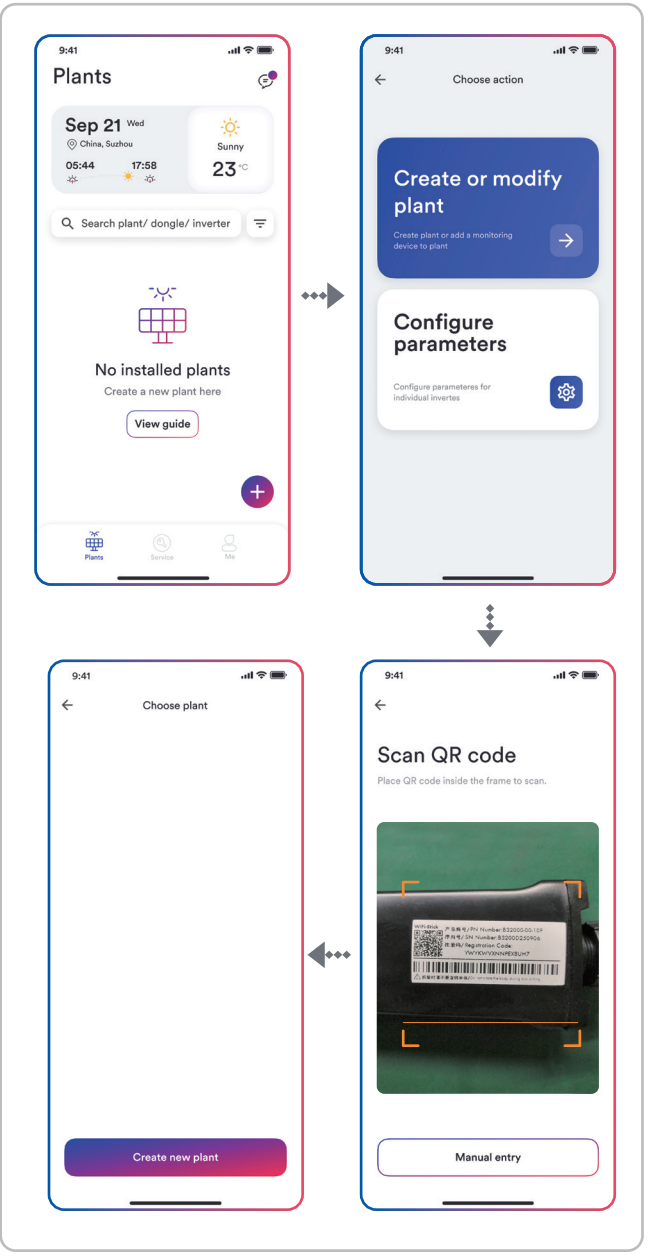
9:41
Plants
Sep 21 Wed
China, Suzhou
05:44
17:58
Sunny
23 °C
Search plant/ dongle/ inverter
No installed plants
Create a new plant here
View guide
Plants
Service
Me
9:41
Choose action
Create or modify plant
Create plant or add a monitoring device to plant
Configure parameters
Configure parameteres for individual invertes
9:41
Scan QR code
Place QR code inside the frame to scan.
Manual entry
9:41
Choose plant
Create new plant

Step 2

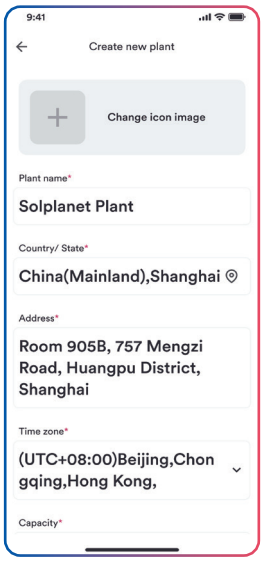

Step 3

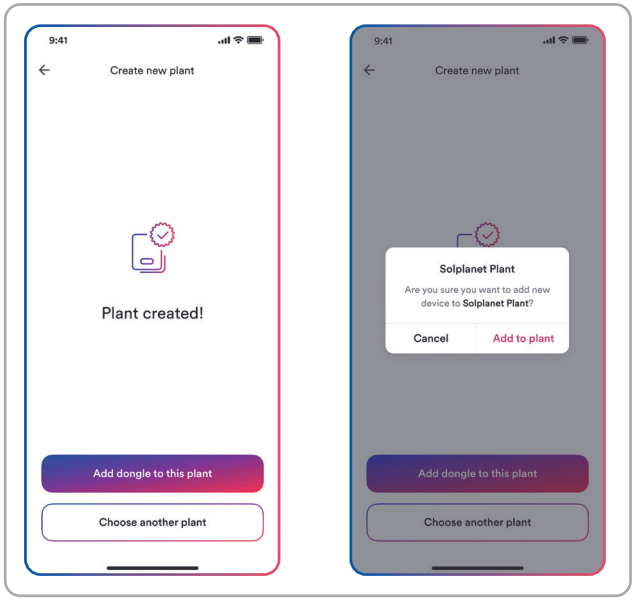

Step 4

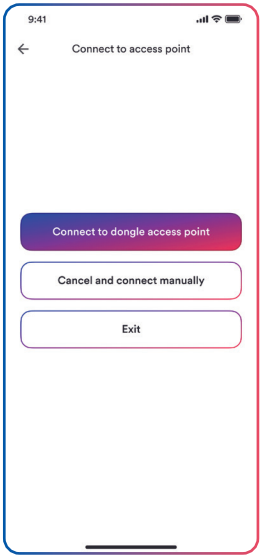

Step 5

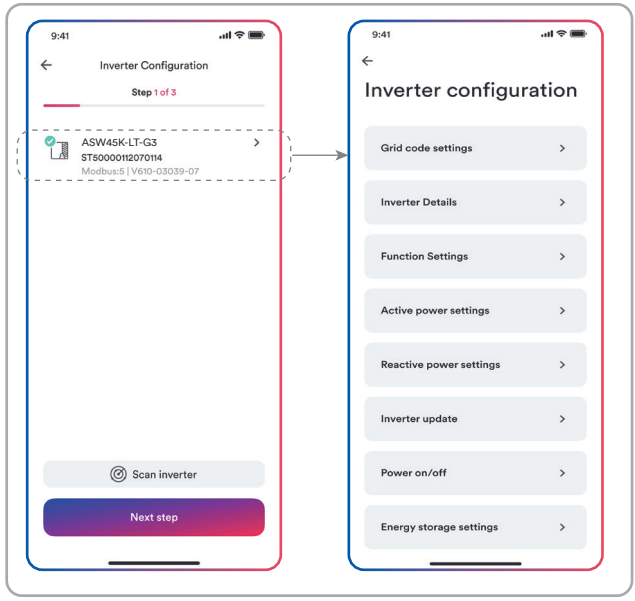

Step 6

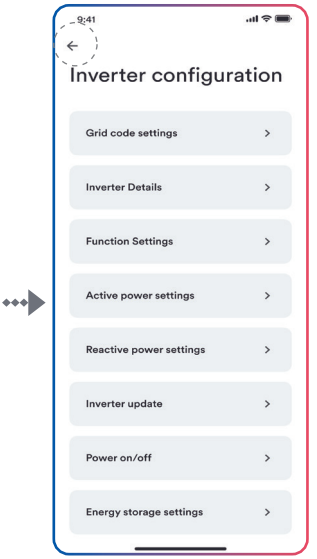

Step 7

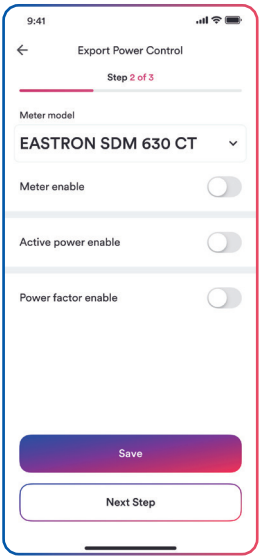

Step 8

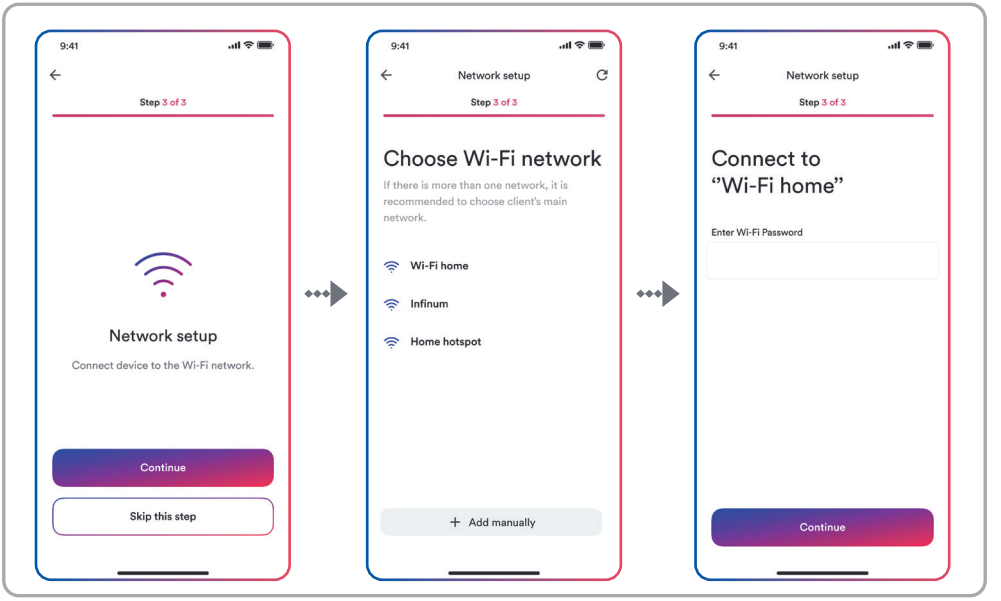

Step 9

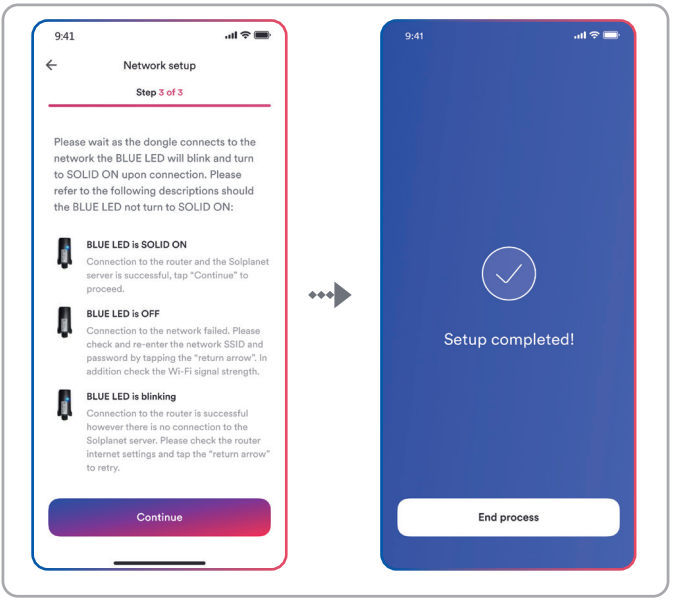

Step 10

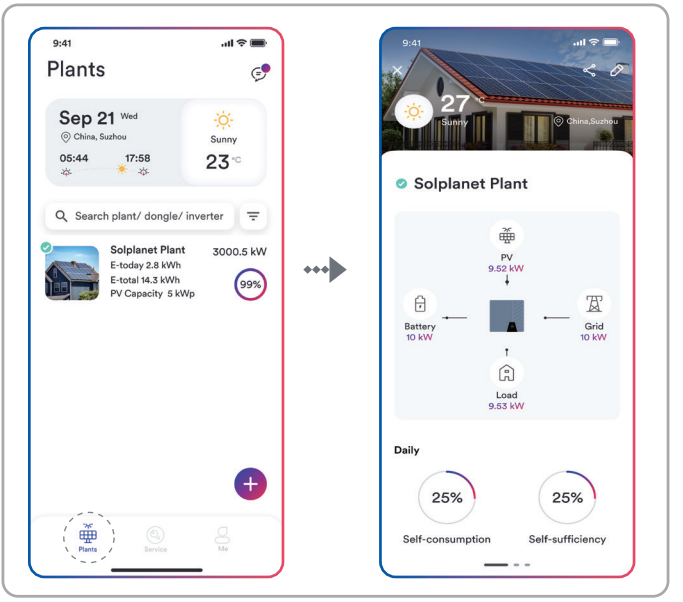

Step 11

8.5 Setting parameters

8.5.1 Inverter configuration

Solplanet's products comply with local grid codes when leaving the factory. The grid code and the parameters according to the requirements of the installation site should still be checked and confirmed. Once configuration of the product is completed, the product will start operating automatically.

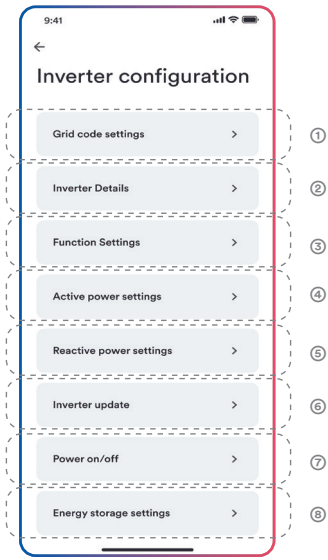

Table description

No.	Function	Description
①	Grid code settings	Choose a grid code. Allows the configuration of protection parameters, start operation parameters and auotomatic reconnection parameters.
②	Inverter Details	Displays the general information of the inverter. Displays the present operation value of the inverter.
③	Function settings	Activate general inverter functions.

④	Active power settings	Allows the configuration of the P(U) curve, P(f) curve, active power limit and active power ramp rate.
⑤	Reactive power settings	Allows the configuration the Q (U) curve, cos φ (P) curve, fixed Q value or fix cos φ value.
⑥	Inverter update	Update the firmware of the inverter and monitoring device e.g. Wi-Fi stick.
⑦	Power on/off	Remote turn ON/OFF of the inverter on the App.
⑧	Energy storage settings	Configure the parameters of the hybrid inverter. Configure the parameters of the battery.

8.5.2 Grid code settings

For the Australia market, the inverter cannot be connected to the grid before the safety related area is set. Please select from Australia Region A/B/C to comply with AS/NZS 4777.2:2020, and contact your local electricity grid operator on which Region to select.

Normally you only need choose the grid code from the support grid code list. The product has fully complied with the standards that are added in the list. If required, the parameters can be adjusted to meet grid operator requirements.

Procedure:

Step 1: Tap “Grid code setting” to enter to the next page.

Step 2: Swipe the smart device screen to choose the correct grid code, then tap “Save” and go back the previous page.

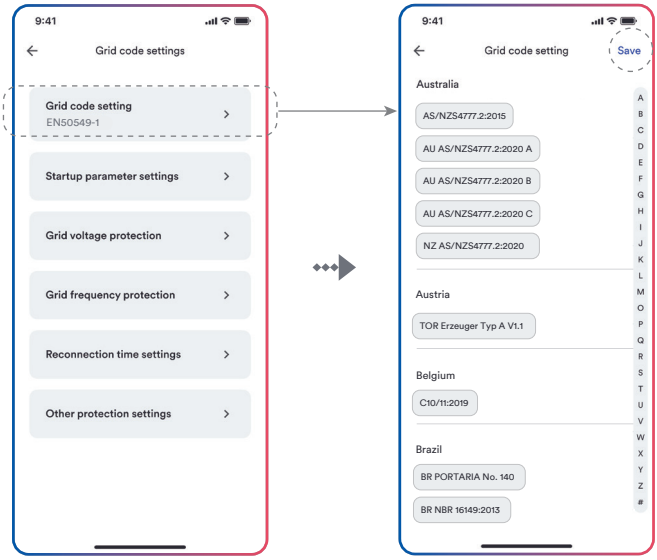

Step 1 Step 2

8.5.3 Active power reduction at overfrequency P(f)

There are four modes(Please refer to the following images)which can be chosen for this function and certain parameters can be configured according to the requirement of the local grid company.

Procedure:

Step 1: Tap “Active power settings” to enter to the next page.

Step 2: Tap “Overfrequency response settings” to enter to the next page.

Step 3: Tap the drop-down menu to choose the mode of this function.

Step 4: Configure the parameters and tap “Save”.

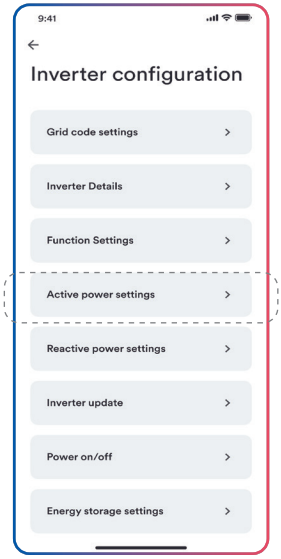

Step 1

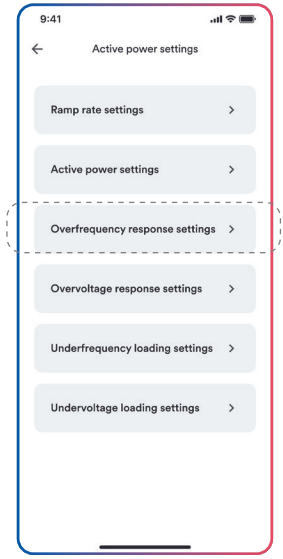

Step 2

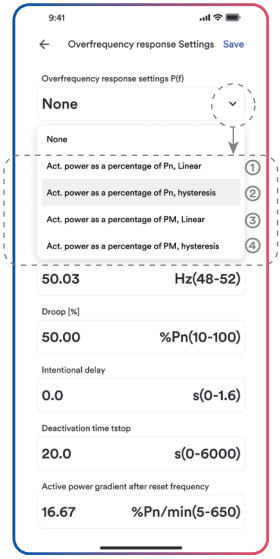

Step 3

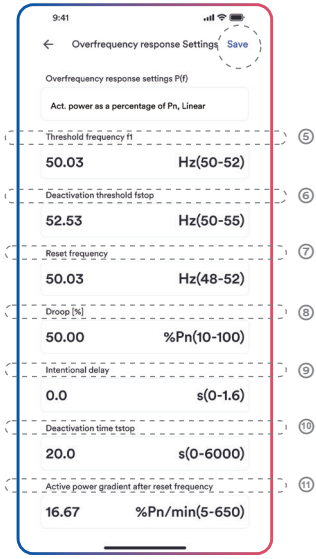

Step 4

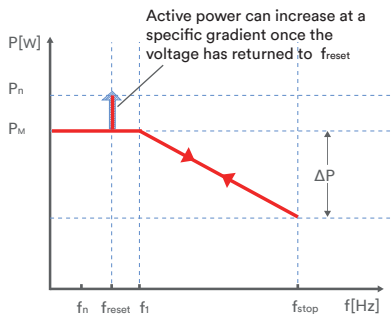

Act. Power as a percentage of Pn, Linear
Act. Power as a percentage of PM, Linear

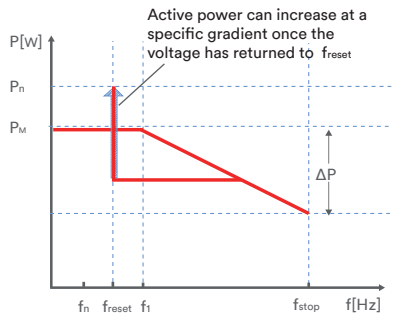

Act. Power as a percentage of Pn, hysteresis
Act. Power as a percentage of PM, hysteresis

Table description

No.	Name	Description
①	Act. Power as a percentage of P_n, Linear	Droop is defined as the active power as a percentage of Pn. The active power will continuously move along the frequency characteristic curve in the frequency range of f_1 to f_{stop}.
②	Act. Power as a percentage of P_n, hysteresis	Droop is defined as the active power as a percentage of Pn. The active power shall remain at or below the lowest power output level reached in response to the increase in frequency between f_1 to f_{stop}.
③	Act. Power as a percentage of P_M, Linear	Droop is defined as the active power as a percentage of P_M. The active power will continuously move along the frequency characteristic curve in the frequency range of f1 to f_{stop}.
④	Act. Power as a percentage of P_M, hysteresis	Droop is defined as the active power as a percentage of P_M. The active power shall remain at or below the lowest power output level reached in response to the increase in frequency between f_1 to f_{stop}.
⑤	Threshold frequency f_1	The threshold frequency for activating active power response to overfrequency.

⑥	Deactivation threshold f_{stop}	The threshold frequency for deactivating the active power response to overfrequency or disconnecting the inverter from the grid.
⑦	Reset frequency f_{reset}	The threshold frequency for deactivating the active power response to overfrequency after the frequency reducing.
⑧	Droop ΔP	Reducing the active power in percentage of Pn or P_M when the frequency rise to f_{stop}.
⑨	Intentional delay time	The delay time for activating active power response to overfrequency after the frequency over f1. An intentional delay shall be programmable to adjust the dead time to a value between the intrinsic dead time and 2s.
⑩	Deactivation time tstop	The delay time that the active power can increase after the frequency below f_{reset}.
⑪	Active power gradient	The active power increasing gradient as a percent of Pn per minutes after the frequency reducing to f_{reset}.

Here, the Droop is different from the Droop S in section 3.7.2 of the standard EN 50549-1. The formula below should be used to manually configure the Droop S.

$$\Delta P = \frac{(f_{stop}-f_1)/f_n}{\text{Droop S}} \times 100$$

8.5.4 Active power reduction at overvoltage P(U)

There are five modes(Please refer to the following images)which can be chosen for this function and certain parameters can be configured according to the requirement of the local grid company.

Procedure:

Step 1: Tap “Active power settings” to enter to the next page.

Step 2: Tap “Overvoltage response settings” to enter to the next page.

Step 3: Tap the drop-down menu to choose the mode of this function.

Step 4: Configure the parameters and tap “Save”.

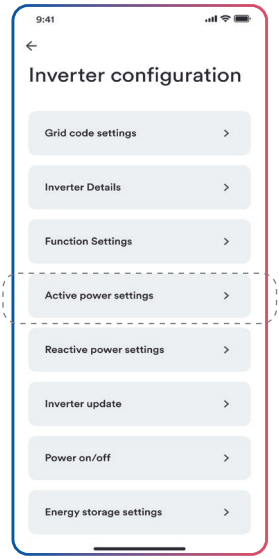

Step 1

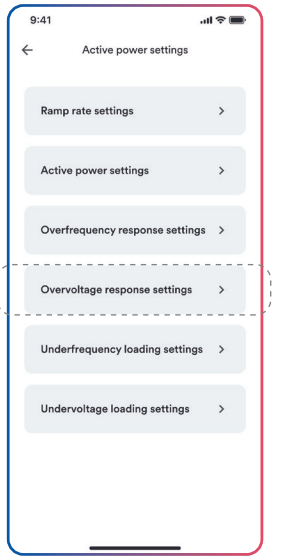

Step 2

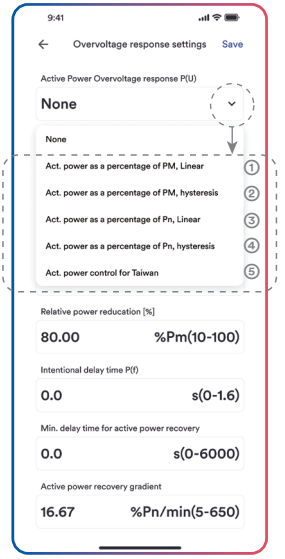

Step 3

Step 4

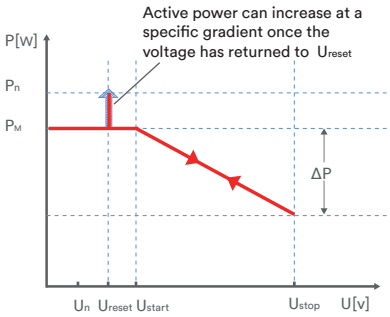

Act. Power as a percentage of P_M, Linear

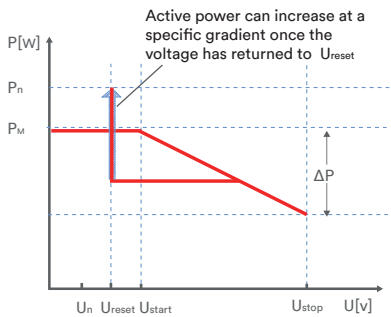

Act. Power as a percentage of P_M, hysteresis

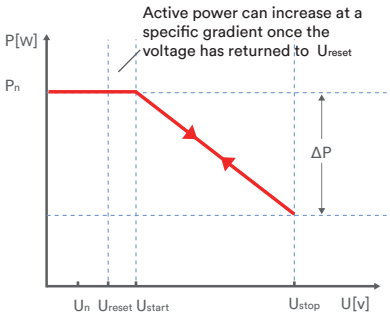

Act. Power as a percentage of P_n, Linear

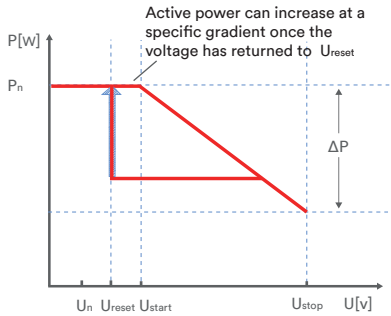

Act. Power as a percentage of P_n, hysteresis

Table description

No.	Parameter	Description
①	Act. Power as a percentage of P_M, Linear	Droop is defined as the active power as a percentage of P_M. The active power will continuously move along the voltage characteristic curve in the voltage range of Ustart to U_{stop}. The active power will reduce from the P_M which is the instantaneous active power at the time of exceeding Start voltage U_{start}.
②	Act. Power as a percentage of P_M, hysteresis	Droop is defined as the active power as a percentage of P_M. The active power shall remain at or below the lowest power output level reached in response to the increase in voltage between U_{start} to U_{stop}. The active power will reduce from the P_M which is the instantaneous active power at the time of exceeding Start voltage U_{start}.
③	Act. Power as a percentage of P_n, Linear	Droop is defined as the active power as a percentage of Pn. The active power will continuously move along the voltage characteristic curve in the voltage range of U_{start} to U_{stop}. The active power will reduce from the rated active power Pn at all time. The active power may not reduce if the value of the curve is lower than the instantaneous active power at the time of exceeding Start voltage U_{start}.
④	Act. Power as a percentage of P_n, hysteresis	Droop is defined as the active power as a percentage of Pn. The active power shall remain at or below the lowest power output level reached in response to the increase in the voltage range of U_{start} to U_{stop}. The active power reduce from the rated active power Pn at all time. The active power maybe don't reduce if the limited value of the curve is lower than the instantaneous active power at the time of exceeding Start voltage U_{start}.
⑤	Act. Power control for Taiwan	Special control mode for Chinese Taiwan market.
⑥	Start voltage U_{start}	The threshold voltage for activating active power response to overvoltage.

⑦	Stop voltage U_{stop}	The threshold voltage for deactivating the active power response to overvoltage or disconnecting the inverter from the grid.
⑧	Reset voltage U_{reset}	The threshold voltage for deactivating the active power response to overvoltage after the voltage reducing. Reset voltage does not function in the mode “Act. Power as a percentage of Pn, Linear”.
⑨	Droop ΔP	Reducing the active power in percentage of Pn or P_M when the voltage rise to U_{stop}.
⑩	Intentional delay time	The delay time for activating active power response to overvoltage after the voltage over U_{start}. An intentional delay shall be programmable to adjust the dead time to a value between the intrinsic dead time and 2s.
⑪	Deactivation time tstop	The delay time that the active power can increase after the voltage below U_{reset}.
⑫	Active power gradient	The active power increasing gradient as a percent of Pn per minutes after the frequency reducing to f_{reset}.

8.5.5 Cosφ(P) curve configuration

The power related control mode cosφ(P) controls the cosφ of the output as a function of the active power output.

There are four coordinate points that can be configured. The coordinate points are the active power as a percentage of Pn and the displacement factor cosφ.

Procedure:

Step 1: Tap “Reactive power settings” to enter to the next page.

Step 2: Tap “Enable reactive power” to choose the reactive power control mode and tap the left arrow to go back.

Step 3: Tap “Cosφ(P) curve settings” to enter to the next page.

Step 4: Configure the parameters and tap “Save”.

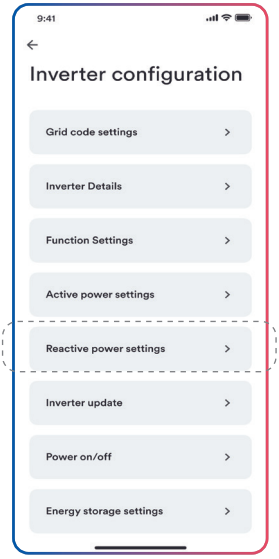

Step 1

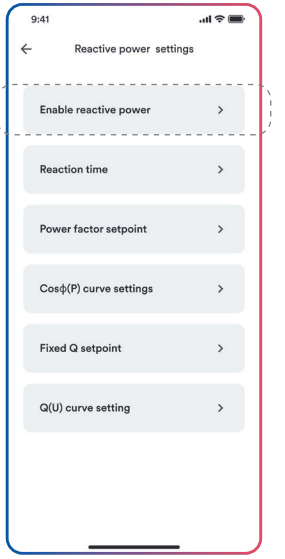

Step 2

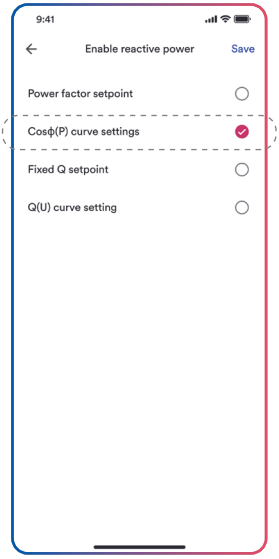

Step 3

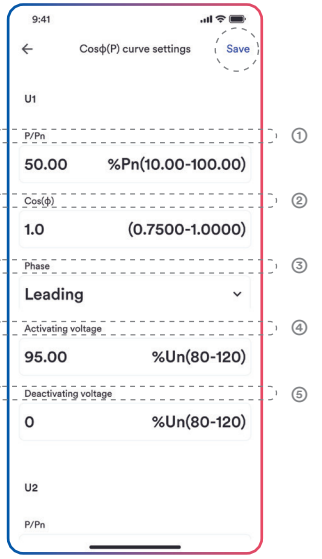

Step 4

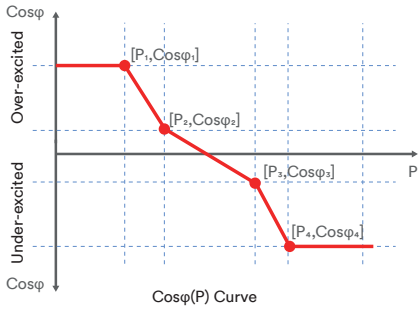

Table description

No.	Parameter	Description
①	P/Pn	The active power as a percentage of Pn.
②	Cosφ	The displacement factor that is cosine of the phase angle between the fundamental components of the line to neutral point voltage and the respective current.
③	Phase	Choose the over-excited or under-excited.
④	Activating voltage	The lock-in voltage value that enables the automatic reactive power delivery mode. Activation threshold as a percentage of Un corresponds to 'lock-in' voltage.
⑤	Deactivating voltage	The lock-out voltage value that disables the automatic reactive power delivery mode. Deactivation threshold as a percentage of Un corresponds to 'lock-out' voltage.

Grid operators may require two voltage thresholds as a percentage of Un to activate or deactivate the function. The voltage thresholds are usually referred to as 'lock-in' and 'lock-out' voltage.

8.5.6 Q(U) curve configuration

The voltage related control mode Q(U) controls the reactive power output as a function of the voltage.

There are four coordinate points that can be configured. The coordinate points are the voltage as a percentage of Un and the reactive power as a percentage of Pn.

Procedure:

Step 1: Tap “Reactive power settings” to enter to the next page.

Step 2: Ttap “Enable reactive power” to choose the reactive power control mode and tap the left arrow to go back.

Step 3: Tap “Q(U) curve settings” to enter to the next page.

Step 4: Configure the parameters and tap “Save”.

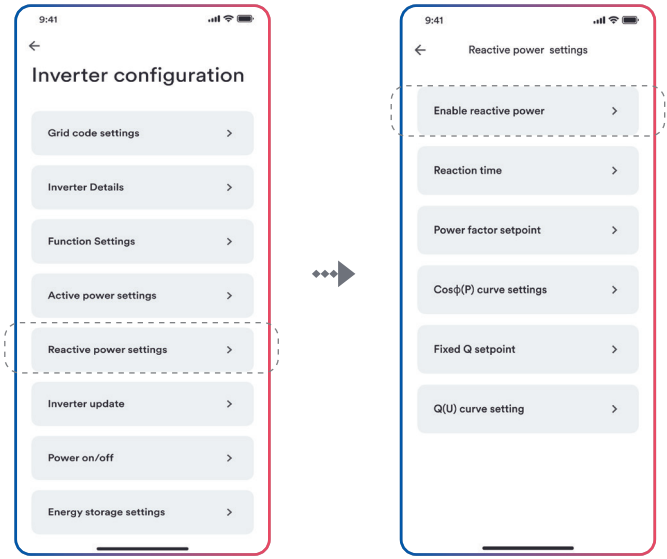

Step 1 Step 2

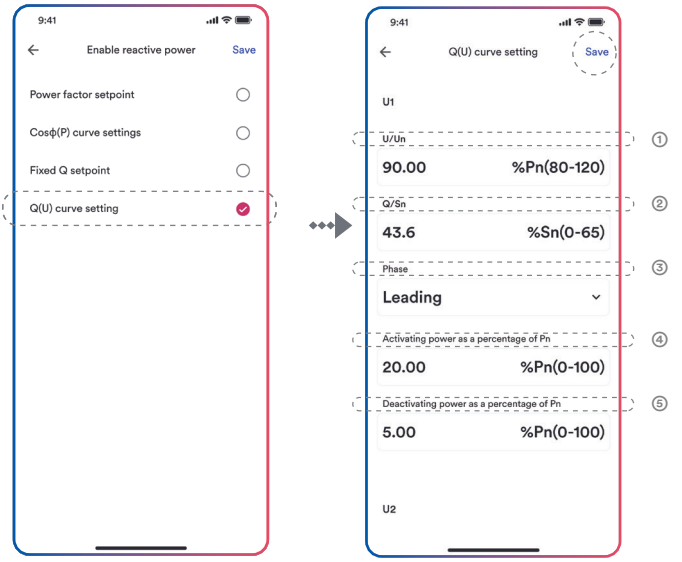

Step 3 Step 4

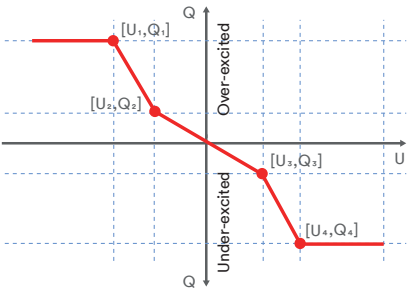

Q(U)Curve

Table description

No.	Parameter	Description
①	U/U_n	The voltage as a percentage of Un.
②	Q/P_n	The reactive power as a percentage of Pn.
③	Phase	Choose the over-excited or under-excited.
④	Activating power as a percentage of P_n	The lock-in active power value that enables the automatic reactive power delivery mode. Activation threshold as a percentage of Pn corresponds to 'lock-in' power.
⑤	Deactivating power as a percentage of P_n	The lock-out active power value that disables the automatic reactive power delivery mode. Deactivation threshold as a percentage of Pn corresponds to 'lock-out' power.

Some grid companies maybe requires two active power thresholds as a percentage of Pn to activate or deactivate the function. The active power thresholds normally call 'lock-in' and 'lock-out' active power.

9 Decommissioning the product

9.1 Disconnecting the inverter from voltage sources

Prior to performing any work on the product, always isolate it from all voltage sources as described in this section. Always adhere to the prescribed sequence.

WARNING

Danger to life due to electric shock from destruction of the measuring device due to overvoltage.

Overvoltage can damage a measuring device and result in voltage being present in the enclosure of the measuring device. Touching the live enclosure of the measuring device results in death or lethal injuries due to electric shock.

Only use measuring devices with a DC input voltage range of 1100 Vdc or higher.

Procedure:

Step 1: Turn OFF the AC circuit breaker connected downstream of the AC output of the inverter and lock and secure it to avoid inadvertent reconnection.

Step 2: Turn OFF the DC switch and lock and secure it to avoid inadvertant reconnection.

Step 3: Wait until the LEDs are OFF.

Step 4: Use a current clamp meter to ensure that no current is present in the DC cables.

DANGER

Danger to life due to electric shock when touching exposed exposed DC conductors or DC plug contacts if the DC connectors are damaged or loose!

The DC connectors can break or become damaged, become free of the DC cables, or no longer be connected correctly if the DC connectors are released and disconnected incorrectly. This can result in the DC conductors or DC plug contacts being exposed. Touching exposed live DC conductors or DC plug connectors will result in death or serious injury due to electric shock.

- Wear appropriately insulated gloves and use appropriately insulated tools when working on the DC connectors.
- Ensure that the DC connectors are in perfect condition and that none of the DC conductors or DC plug contacts are exposed.
- Carefully release and remove the DC connectors as described in the following.

Step 5: Wait until the LEDs are OFF.

Type 1 DC connector "Sunclix"	Type 2 DC connector
Release and remove the DC connectors. To do so, insert a flat-blade screwdriver or an angled screwdriver (blade width: 3.5 mm) into one of the side slots and pull the DC connectors out.	To remove DC plug connectors, insert the appropriate tool into the slots and press the tool with an appropriate force.
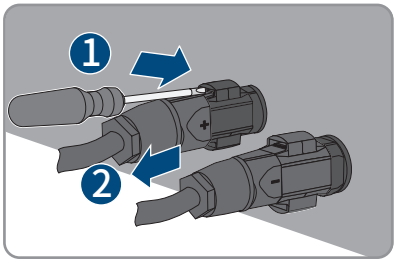	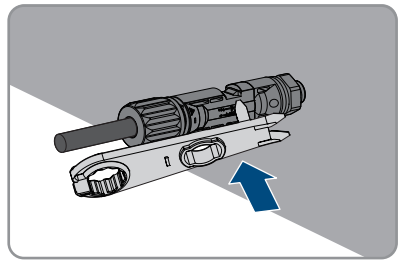

Step 6: Ensure that no voltage is present between the positive terminal and negative terminal at the DC inputs using a suitable measuring device.

Step 7: Open the AC/COM cover junction box and use a multimeter to ensure that the AC wiring terminals isolated from an AC power source. Remove the AC cables in reverse order by referring to “6.3.2 AC cable connection” and “6.5 RS485 cable connection” .

Step 8: Hold down the buckle on the side of the RS485 terminal and pull out the RS485 terminal.

Step 9: Loosen the nut of the Wi-Fi stick and then gently pull out the Wi-Fi stick.

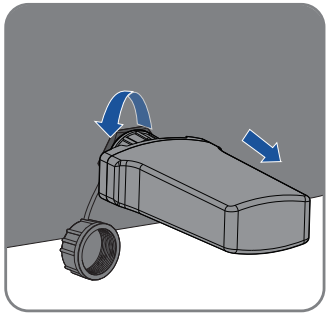

9.2 Dismantling the inverter

After disconnecting all electrical connections as described in Section 9.1, the inverter can be removed as follows.

Procedure:

Step 1: Dismantle the inverter referring to “5.3 Mounting” in reverse steps.

Step 2: If necessary, remove the wall-mounting bracket from the wall.

Step 3: If the inverter will be reinstalled in the future, please refer to “3.2 Inverter Storage”.

10 Technical data

10.1 AC/DC

10.1.1 ASW45-60K-LT-G3

DC Input			
Type	ASW45K-LT-G3	ASW50K-LT-G3	ASW60K-LT-G3
Maximum power of PV array	67500Wp	75000Wp	90000Wp
Maximum input voltage	1100V		
MPP voltage range	200-1000V		
MPP voltage range at Pnom	500-850V		
Rated input voltage	630V		
Minimum input voltage	200V		
Initial input voltage	250V		
Max. operating input current per MPPT	40A/32A/32A/40A	40A/32A/32A/40A/32A	
Max. short circuit current per MPP	60A/48A/48A/60A	60A/48A/48A/60A/48A	
Maximum reverse current into the PV modules	0A		
Number of independent MPP inputs	4	5	5
Strings per MPP input	2		
Overvoltage category in accordance with ICE 60664-1	II		

AC output			
Rated power at 230V	45000W	50000W	60000W
Rated apparent power at cosφ = 1	49500W	55000W	66000W
Maximum apparent power at cos φ = 1	49500VA	55000VA	66000VA
Nominal grid voltage	220V / 380V [3/N/PE] 230V / 400V [3/N/PE] 240V / 415V [3/N/PE]		
Grid voltage range	180-305V / 312-528V		
Nominal grid frequency	50Hz/60Hz		
Grid frequency range	45-55Hz/55-65Hz		
Rated current at 220 V	68.2A	75.8A	91.0A
Rated current at 230V	65.3A	72.5A	87.0A
Rated current at 240V	62.5A	69.5A	83.4A
Maximum output current	75.2A	83.6A	95.3A
Inrush current	<20% of nominal AC current for a maximum of 10ms		
Contribution to peak short-circuit current ip	330A		
Initial short-circuit alternating current (Ik" first single period effective value)	75.2A	83.6A	95.3A
Short circuit current continuous [ms] (max output fault current)	75.2A	83.6A	95.3A
Recommended rated current of AC circuit breaker	100A	100A	125A

Total harmonic distortion of the output current with total harmonic distortion of the AC voltage <2%, and AC power >50% of the rated power	<3%
Power factor at rated power	1
Adjustable displacement power factor	0.8 inductive.... 0.8 capacitive
Feed-in phase	3
Connection phase	3
Overvoltage category in accordance with IEC 60664-1	III
Efficiency	
Maximum efficiency	98.6%
European weighted efficiency	98.3%

(1) The voltage range meets the requirements of the corresponding national grid code.

(2) The frequency range meets the requirements of the corresponding national grid code.

10.2 General data

General data	ASW45K/50K/60K-LT-G3
Width × height × depth	670 mm × 580 mm ×270mm
Weight	40Kg/43Kg/43Kg
Topology	Non-isolated
Operating temperature range	-25℃...+60℃
Allowable relative humidity range (non-condensing)	0% ... 100%
Degree of protection for electronics in accordance with IEC 60529	IP66
Climatic category in accordance with IEC 60721 -3-4	4K4H
Protection class (according to IEC 62103)	I
Pollution degree outside the enclosure	3
Pollution degree inside the enclosure	2
Maximum operating altitude above mean sea level	4000m(>3000m derating)
Self-consumption (night)	<1 W
Cooling method	Active coolling
Typical noise emission	< 55 dB(A)@1m
Display	LED indicator, App

Demand response mode in accordance with AS/NZS 4777.2	DRM0
Export active power output	Via connecting Smart meter
Earth Fault Alarm	Audible (AU)
Interfaces	1 x RS485 port, 1 x WiFi stick port
Communication	Modbus RTU
Mounting information	Wall mounting bracket
DC connection technology	Plug-in connector
AC connection technology	OT/DT Connecto
Radio technology	WLAN 802.11 b/g/n
Radio spectrum	2.4 GHz
Maximum transmission power	100 mW

10.3 Protective device

Protective devices	ASW45K/50K/60K-LT-G3
DC reverse polarity protection	Integrated
DC isolator	Integrated
Ground fault monitoring	Integrated
AC short- circuit current capability	Integrated
All-pole sensitive residual-current monitoring unit	Integrated
Active anti-islanding protection	Integrated
PV string current monitoring	Integrated
DC current injection monitoring	Integrated
Low voltage ride through	Integrated
High voltage ride through	Integrated
Overvoltage protection	DC Type II / AC Type III

11 Troubleshooting

When the PV system does not operate normally, we recommend the following solutions for quick troubleshooting. If an error occurs, the red LED will turn solid ON. The error code can be read from the Solplanet APP.

Error code	Message	Corrective measures
1-5 8-10	Self-diagnosis fault	• Disconnect the inverter from the utility grid and the PV array and reconnect it after LED's turn off. If this fault is still being displayed, contact Solplanet service.
6	Bus over voltage fault	• Check the open-circuit voltages of the strings and make sure it is below the maximum DC input voltage of the inverter. • If the input voltage is within the permitted range and the fault still occurs, it might be that the internal circuit has been damaged. Contact Solplanet service.
32	RoCoF fault	• Check the grid frequency and observe how often major fluctuations occur. • If this fault is caused by frequent fluctuations, try to modify the operating parameters after informing the grid
33	Grid frequency fault	• Check the grid frequency and observe how often major fluctuations occur. • If this fault is caused by frequent fluctuations, try to modify the operating parameters after informing the grid operator first.
34	Grid voltage fault	• Check the grid voltage and and the cable connections at the inverter. • Check the grid voltage at the point of connection. • If the grid voltage is outside the permissible range due to local grid conditions, try to modify the values of the monitored operational limits after informing the electric utility company first. • If the grid voltage lies within the permitted range and this fault still occurs, contact Solplanet service.

35	Grid loss	• Check whether any AC circuit breakers downstream of the inverter AC output have switched off. • Check the grid voltage to ensure that it is within the permitted values of the grid code. • Check the AC cable and the cable connection at the inverter. • If this fault is still being shown, contact Solplanet service.
36 56-58	GFCI fault	• Ensure the grounding connection of the inverter is reliable. • Conduct a visual inspection of all PV cables and modules. • If this fault is still shown, contact Solplanet service.
37	PV over voltage fault	• Check the open-circuit voltages of the strings and make sure it is below the maximum DC input voltage of the inverter. • If the input voltage lies within the permitted range and the fault still occurs, contact Solplanet service.
38	Isolation fault	• Check the PV array's insulation to ground and ensure that the insulation resistance to ground is greater than 1 MOhm. Otherwise, conduct a visual inspection of all PV cables and modules. • Ensure the grounding connection of the inverter is reliable. • If this fault occurs often, contact Solplanet service.
40	Over temperature fault	• Check whether the airflow to the heat sink is obstructed. • Check whether the ambient temperature around the inverter is too high.
41-45 47	Self-diagnosis fault	• Disconnect the inverter from the grid and the PV array and reconnect after 3 minutes. • If this fault is still being shown, contact Solplanet service.
48	10 minutes average over voltage fault	• Check the grid voltage at the point of connection of inverter. • If the grid voltage is outside the permissible range due to local grid conditions, try to modify the values of the monitored operational limits after informing the electric utility company first. • If the grid voltage lies within the permitted range and this fault still occurs, contact Solplanet service.

61,62	DRMs device fault	• Check the DRED device communication or operation
65	PE wire connection fault	• Check if the ground line is connected with the inverter. • Ensure the grounding connection of the inverter is connected and reliable. • If this fault occurs often, contact Solplanet service.

Contact Solplanet service if you encounter errors not listed in the table above.

12 Maintenance

12.1 Cleaning the contacts of the DC switch

DANGER

High voltage of PV string may cause life danger!

If the DC connector is disconnected while the PV inverter is working, an electric arc may occur causing electric shock and burns.

- Please disconnect the circuit breaker on the AC side first, and then disconnect the DC switch.

To ensure the normal operation of the DC input switch, it is necessary to clean the DC switch contacts every year.

Procedure:

Step 1: Turn OFF the AC circuit breaker downstream of the inverter AC output and lock and secure it to avoid inadvertent reconnection.

Step 2: Rotate the DC switch handle from the ON" position to the "OFF" position and repeat five times.

12.2 Cleaning air inlet and outlet

CAUTION

Hot enclosure or heat sink may cause personal injury!

When the inverter is working, the temperature of the enclosure or heat sink may be higher than 70℃. Physical contact may cause burns.

- Before cleaning the air outlet, shut down the machine and wait approximately 30 minutes until the temperature of the enclosure decreases to a normal temperature.

A considerable amount of heat is generated as the inverter is feeding power into the grid. The inverter adopts a controlled forced-air cooling method. In order to maintain good ventilation, please check to make sure the air inlet and outlet are not blocked.

Procedure:

Step 1: Turn OFF the AC circuit breaker downstream of the AC output of the inverter and ensure that it cannot be inadvertently reconnected.

Step 2: Turn OFF the DC switch, rotate the DC switch handle from the “ON” position to the “OFF” position.

Step 3: Clean the air inlet and outlet of the inverter with a soft brush.

12.3 Fan maintenance

CAUTION

Hot enclosure or heat sink may cause personal injury!

When the inverter is working, the temperature of the enclosure or heat sink may be higher than 70℃. Physical contact may cause burns.

- Before cleaning the air outlet, shut down the machine and wait approximately 30 minutes until the temperature of the enclosure decreases to a normal temperature.

Fans inside the inverter are used to cool the inverter during operation. If the fans do not operate normally, the inverter may not be cooled down and inverter efficiency may decrease. Therefore, it is necessary to clean the dirty fans and replace the broken fans in time.

Procedure:

Step 1: Turn OFF the AC circuit breaker downstream of the AC output of the inverter and ensure that it cannot be inadvertently turned ON.

Step 2: Disconnect the DC switch and rotate the DC switch handle from the “ON” position to the “OFF” position. Wait for approximately 30 minutes until the heatsink temperature is reduced to normal temperature.

Step 3: Loosen the screw on the sealing plate of the fan module.

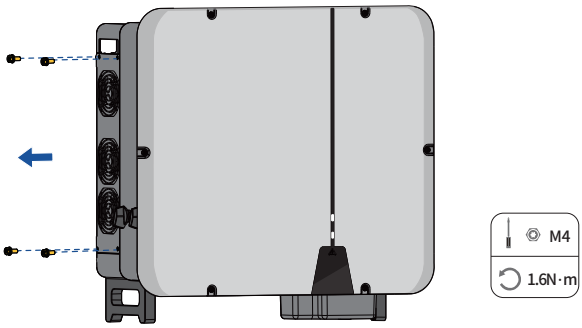

Step 4: Press down on the latch, disconnect the fan power connector and pull out the fan tray.

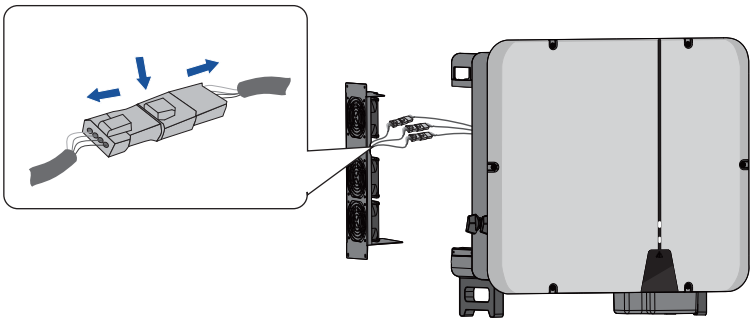

Step 5: Remove the screws at the bottom of the fan. Use a clean cloth, brush, or vacuum cleaner to clean the fan, or replace the faulty fan directly.

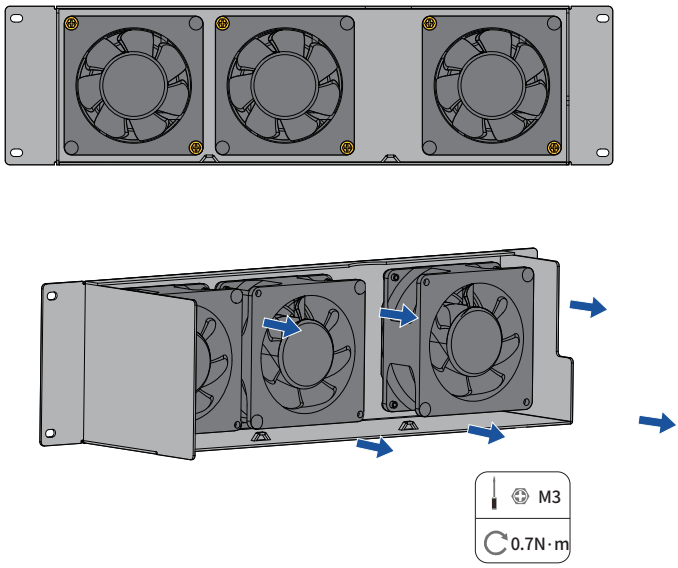

Step 6: Reinstall the fan back to the inverter in reverse order and restart the inverter.

13 Recycling and disposal

Dispose of the packaging and replaced parts according to the rules applicable in the country where the device is installed.

Do not dispose of the product together with the household waste but in accordance with the disposal regulations for electronic waste applicable at the installation site.

14 EU declaration of conformity

Within the scope of the EU directives

- Radio Equipment Directive 2014/53/EU

(L 153/62-106. May 22. 2014) (RED)

- Restriction of the use of certain hazardous substances 2011/65/EU (L 174/88, June 8, 2011) and 2015/863/EU (L 137/10, March 31,2015) (RoHS)

AISWEI Technology Co., Ltd. confirms herewith that the inverters described in this manual are in compliance with the fundamental requirements and other relevant provisions of the above mentioned directives.

The entire EU Declaration of Conformity can be found at www.solplanet.net.

15 Service and warranty

If you have any technical problems concerning our products, please contact Solplanet service. We require the following information in order to provide you with the necessary assistance:

- Inverter device type
- Inverter serial number
- Type and number of connected PV modules
- Error code
- Mounting location
- Installation date
- Warranty card

Warranty terms and conditions can be downloaded at www.solplanet.net.

When the customer needs warranty service during the warranty period, the customer must provide a copy of the invoice, factory warranty card, and ensure the electrical label of the inverter is legible. If these conditions are not met, Solplanet has the right to refuse to provide with the relevant warranty service.

16 Contact

EMEA

Service email: service.EMEA@solplanet.net

APAC

Service email: service.APAC@solplanet.net

LATAM

Service email: service.LATAM@solplanet.net

AISWEI Pty Ltd.

Hotline: +61 390 988 674

Add.: Level 40, 140 William Street, Melbourne VIC 3000, Australia

AISWEI B.V.

Hotline: +31 208 004 844 (Netherlands)

+48 134 926 109 (Poland)

Add.: Barbara Strozzilaan 101, 5e etage,kantoornummer 5.12, 1083HN Amsterdam, the Netherlands

AISWEI Technology Co., Ltd

Hotline: +86 400 801 9996

Add.: Room 904 - 905, No. 757 Mengzi Road, Huangpu District, Shanghai 200023

https://solplanet.net/contact-us/

Scan QR code:

Monitoring APP

Solplanet

AISWEI Technology CO., Ltd